PRODUCT NEWS

PN-U-008

DIJET®

EXSKS SERIES

TYPE
EXSKS, EXS, MEX

	Modular Head	End Mill	Face Mill
05	Ø.75”~1.50” (Ø20mm~40mm)	Ø0.75”~1.50” (Ø20mm~32mm)	Ø2.0” (40mm~63mm)
07	Ø1.25”~1.50” (Ø32mm~42mm)	Ø1.25”~1.50” (Ø32mm~40mm)	Ø2.0”~4.0” (Ø50mm~80mm)
09			Ø2.0”~6.0” (Ø50mm~160mm)

EXSKS-05 type

EXSKS-07 type

EXSKS-09 type

Features

High-feed milling tools with double-sided inserts achieve ultimate high-feed milling

Features 1

Economical double-sided insert (6 corners)
3D Chipbreaker

Features 2

Strong Clamping System

Dovetail shaped binding faces in pocket prevents movement of inserts from the cutting force with a single screw

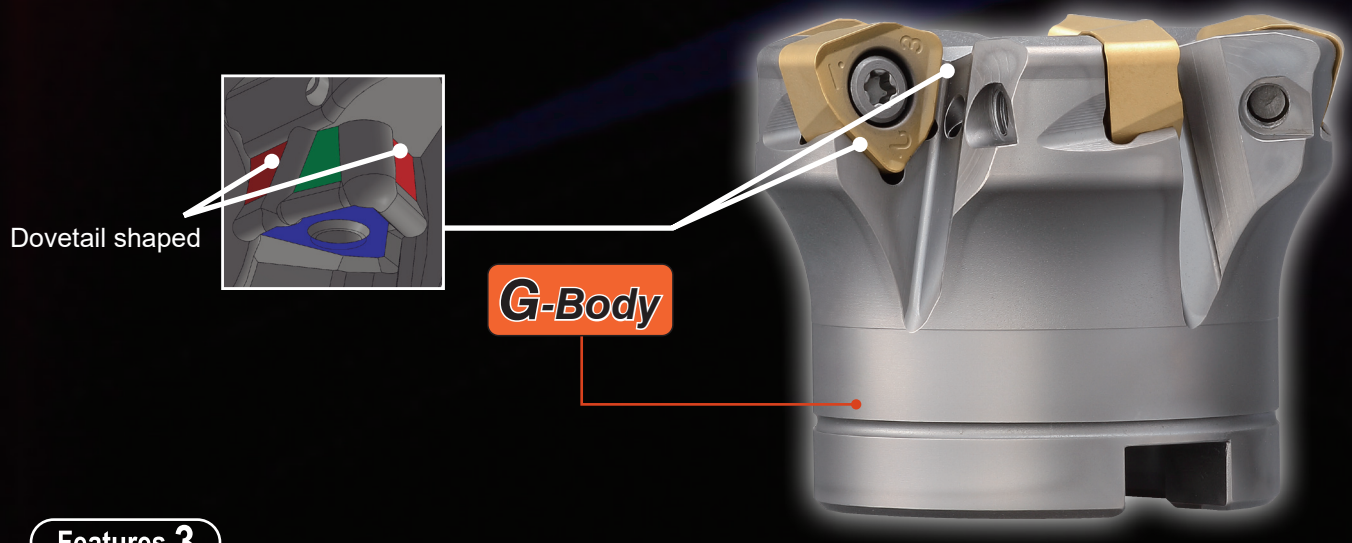

Features 3

ISO	P					M					K				H		
	P01	P10	P20	P30	P40	M01	M10	M20	M30	M40	K01	K10	K20	K30	H01	H10	H20
Application Range			JC8050					JC8050									
		JC8118					JC8118					JC8118				JC8118	
				JC7560						JC7560							

Available in 3 insert grades:

JC7560 - PVD coated grade with improved fracture toughness & heat impact resistance

JC8118 - PVD coated grade that achieves longer tool life for mold steels, high hardened die steels less than 50 HRC & cast iron

JC8050 - PVD coated grade with a carbide substrate that has improved fracture toughness & a coating layer that can be widely applied on carbon steel, mold steel & stainless steel

Introducing the SKS Extreme Series line up . . .

EXSKS-05 type

Ø3/4” - 1 1/2”
Ø20mm - 63mm

Multi-blade specifications with small diameters result in high feed machining possibilities.

Endmill Type

Modular Head Type

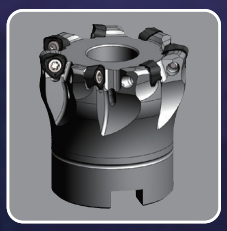

Facemill Type

EXSKS-07 type

Ø1 1/4” - 4.00”
Ø32mm - 80mm

Specifications achieve both insert strength and sharpness allowing stable high-feed machining.

Endmill Type

Modular Head Type

Facemill Type

EXSKS-09 type

Ø2.00” - 6.00”
Ø50mm - 160mm

Larger diameters using thick high-rigid inserts can achieve high-feed machining with larger depth of cut.

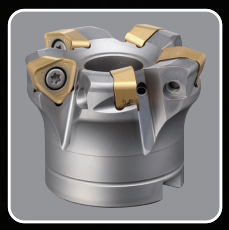

Facemill Type

Comparison of inserts

EXSKS-05 type

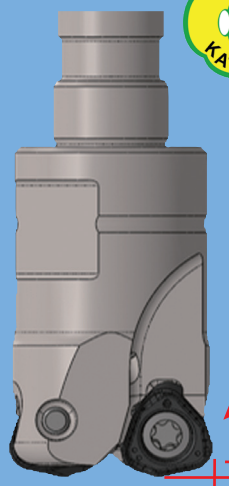

M3 size screw for firm clamping of inserts

MaxAp=1.25mm

W=4.8

WNMU050320ZER-PM

Grades: JC8050
JC8118

Optimal chip breaker for mold steel & High hardened steel less than 50HRC

Corner radius for programming	Remains	Over cut
R2	0.59	0
R2.5	0.5	0
R3	0.41	0.13

mm

EXSKS-07 type

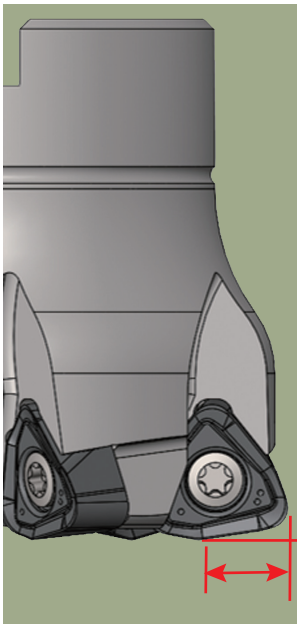

MaxAp=2mm

W=8.1

WNMU070620ZER-PM

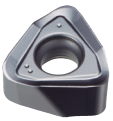

Grades: JC8050
JC8118

Optimal chip breaker for mold steel & High hardened steel less than 50HRC

Corner radius for programming	Remains	Over cut
R3	0.80	0
R3.5	0.73	0.06
R4	0.66	0.21

mm

EXSKS-09 type

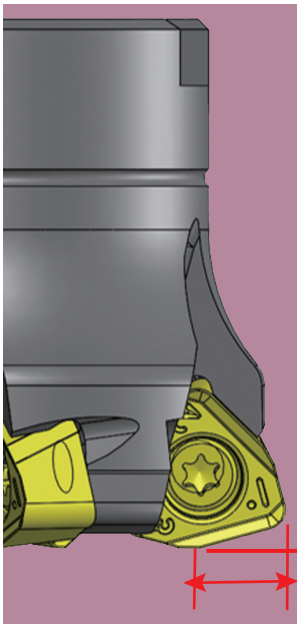

WNMU090720ZER-PM

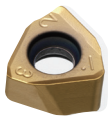

Grades: JC8050
JC8118
JC7560

MaxAp=3mm

Suitable for face milling of ap=1.4mm or more and shape machining such as pocket machining

WNMU090828ZER-PL

Grades: JC8050
JC8118

Suitable for machining shapes such as pocket milling with ap=0.6 mm to 1.2mm. The composite shape of the straight and radius edges reduces fluctuations in cutting resistance during corner machining, realizing stable machining and extending tool life.

PM insert PL insert

MaxAp=3mm (2mm)

W=8.2

Insert	-PM		-PL	
Corner radius for programming	Remains	Over cut	Remains	Over cut
R3	1.41	0	1.18	0
R3.5	1.3	0	1.06	0
R4	1.19	0.025	0.954	0.025

mm

Cutting performance

EXSKS-05 KATANA type

Tool life comparison

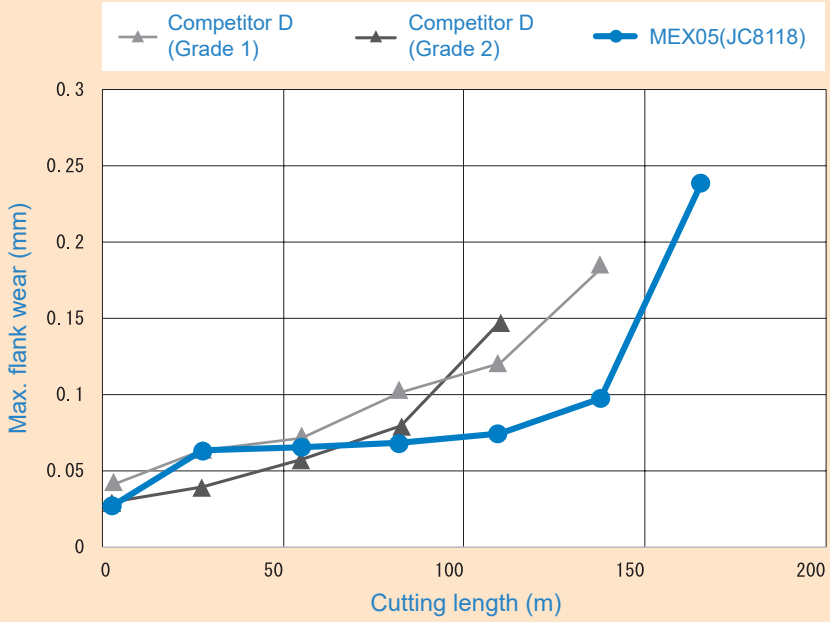

Material: Mold steel (P20)

- Tool dia: Ø25 (MEX-3025-05-M12)
- Insert Grade: JC8118
  WNMU050320ZER
- Cutting conditions:
  Vc=120m/min
  fz=1.5mm/t
  ap=0.8mm
  ae=14mm
- DOWN CUT,
  Air blow
- Test by one insert

	25m	50m	75m
Competitor D (①)			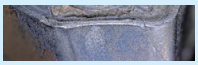
Competitor D (②)	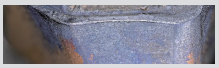	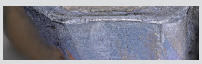	
NEW DIJET WNMU050320 ZER-PM(JC8118)	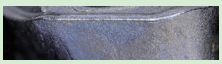		

EXSKS-05 type achieved small and long tool life in stainless steel high feed machining.

Chip removal performance

Large chip pocket achieves excellent chip removal.

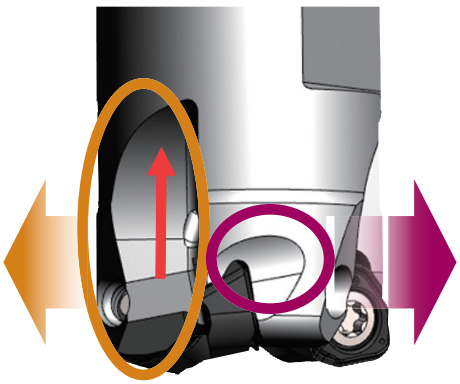

Peripheral groove prevents body rubbing.

Normal Indexable chip pocket

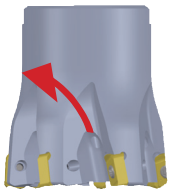

Peripheral groove

Not Peripheral groove

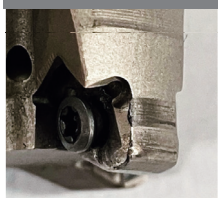

Cutting performance

07 type

Tool life comparison

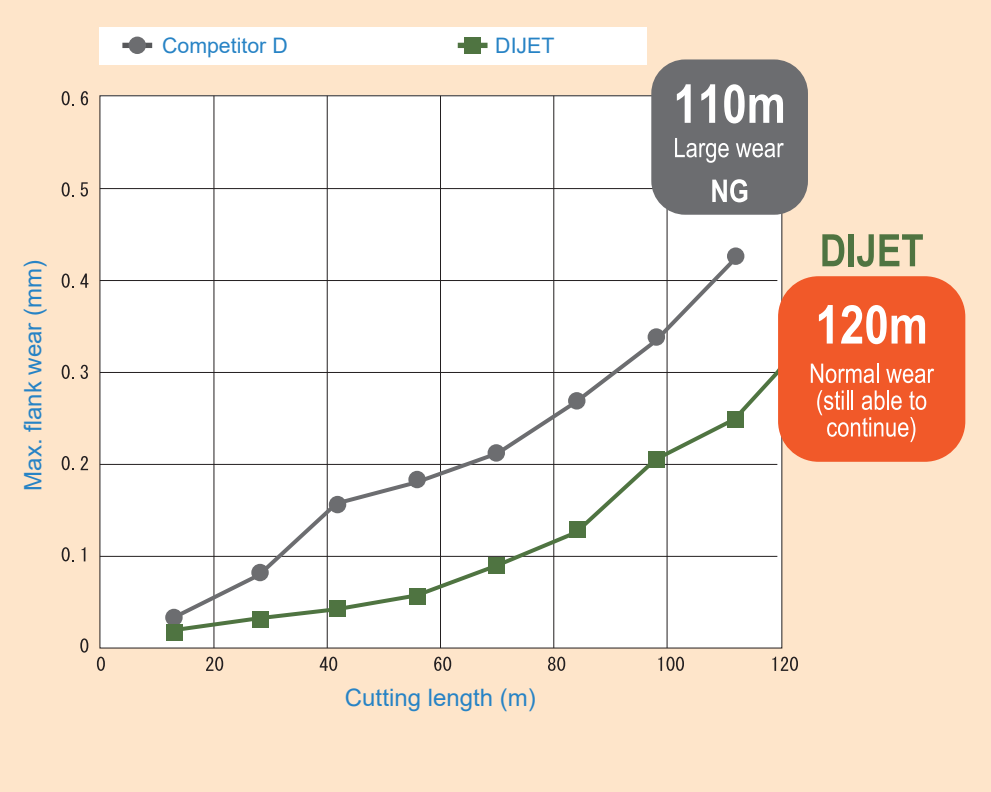

Material: Mold steel (P20)

Machine: Vertical MC

- Tool dia: Ø32 (MEX-2032-07-M16)
- Cutting conditions:
  Vc=200m/min
  fz=1.5mm/t
  ap=1.5mm
  ae=22mm
- UP & DOWN CUT,
  Air blow
- Test by one insert

Possible to process with normal wear even in high feed milling.

Cutting performance

09 type

Cutting force comparison

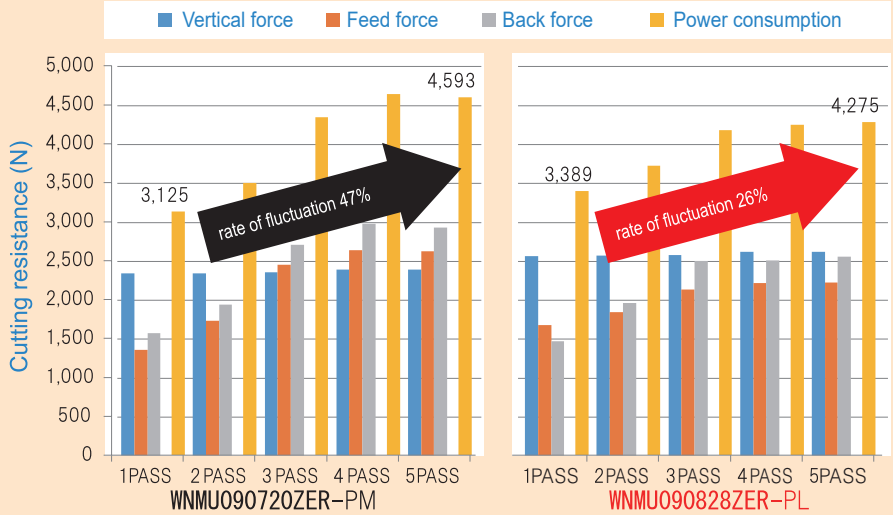

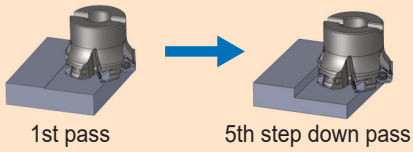

Material: P21
- Tool dia: Ø63
- Cutting conditions:
  - n=450/min
  - Vc=90m/min
  - Vf=680mm/min
  - fz=1.5mm/t
  - ap=0.7mm (each pass)
    (5 total step down passes)
  - ae=45mm

Down cut by one insert
Air blow (internal)
150mm Overhung length

Steady machining is achieved by reducing the fluctuation of cutting force.

Tool life comparison

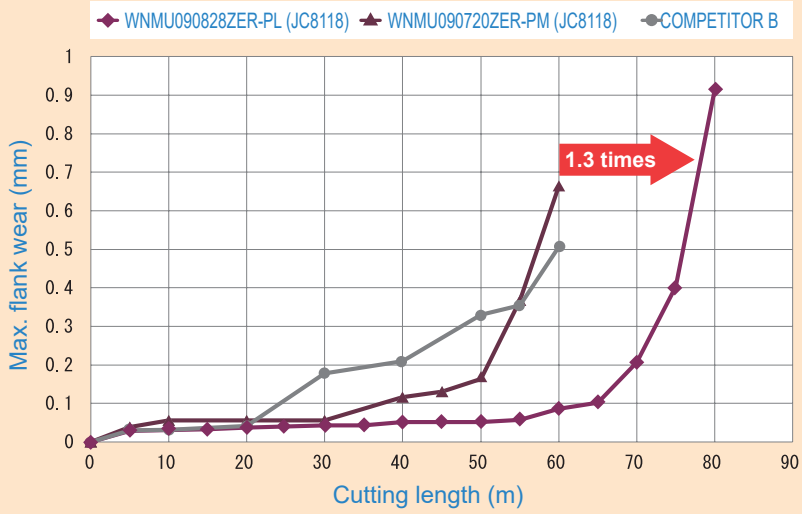

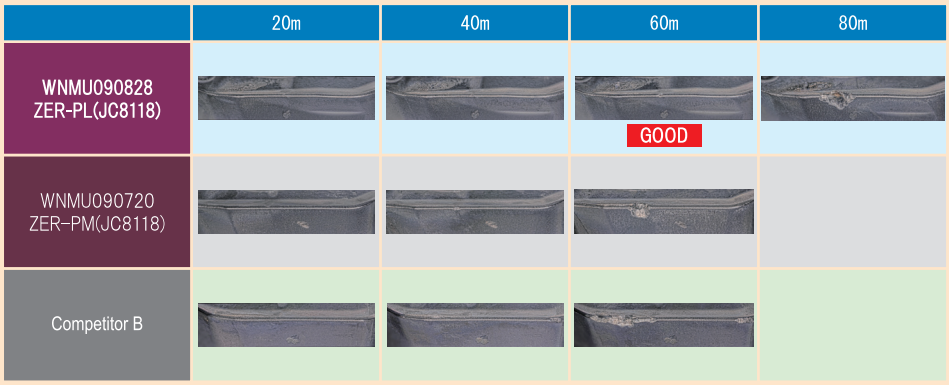

Material: P21
- Tool dia: Ø63
- Cutting conditions:
  - n=450/min
  - Vc=90m/min
  - Vf=680mm/min
  - fz=1.5mm/t
  - ap=0.7mm (each pass)
    (10 total step down passes)
  - ae=45mm

Down cut by one insert
Air blow (internal)
150mm Overhung length

Longer life tool is achieved by reducing the fluctuation of cutting force.

EXSKS-05 KATANA

INCH METRIC

MEX-05 TYPE

Modular Head

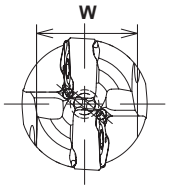

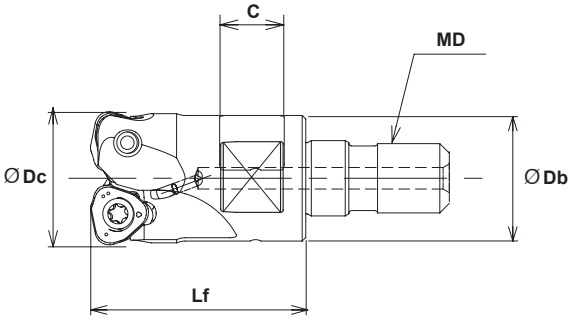

Specifications - Inch

CATALOG NUMBER	STK	DIMENSIONS						HEAD TORQUE LBS/FT	INSERT	Q	PARTS	
		ØDc	Lf	ØDb	MD	C	W				Screw	Wrench
MEX-2075-05-M10	•	.750	1.18	.708	M10	.354	.551	11.8	WNMU050320ZER-PM	2	TSW-307H	T-10
MEX-3100-05-M12	•	1.00	1.38	.906	M12	.433	.748	14.7		3		
MEX-4125-05-M16	•	1.25	1.69	1.14	M16	.472	.866	18.4		4		
MEX-5150-05-M16	•	1.50	1.69	1.26	M16	.551	1.02	18.4		5		

Note: Modular Head holders on page 27

Note: All cutters supplied without inserts, wrench, & moly.

Specifications - Metric

CATALOG NUMBER	STK	DIMENSIONS						HEAD TORQUE Nm	INSERT	Q	PARTS	
		ØDc	Lf	ØDb	MD	C	W				Screw	Wrench
MEX-2020-05-M10	•	20	30	18	M10	9	14	16	WNMU050320ZER-PM	2	TSW-307H	T-10
MEX-2021-05-M10	•	21	30	18	M10	9	14	16		2		
MEX-3025-05-M12	•	25	35	23	M12	11	19	20		3		
MEX-3026-05-M12	•	26	35	23	M12	11	19	20		3		
MEX-3028-05-M12	•	28	35	23	M12	11	19	20		3		
MEX-4030-05-M16	•	30	43	27	M16	12	22	25		4		
MEX-4032-05-M16	•	32	43	29	M16	12	22	25		4		
MEX-4033-05-M16	•	33	43	29	M16	12	22	25		4		
MEX-4035-05-M16	•	35	43	29	M16	12	22	25		4		
MEX-5040-05-M16	•	40	43	32	M16	14	26	25		5		

Note: Modular Head holders on page 27

Note: All cutters supplied without inserts, wrench, & moly.

WNMU-05 TYPE

Insert

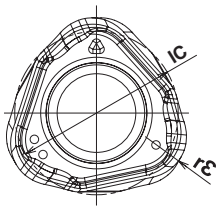

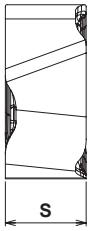

CATALOG NUMBER	TOLERANCE	DIMENSIONS (mm)			PVD COATED	
		IC	S	rε	JC8118	JC8050
WNMU050320ZER-PM	M	7.7	3.8	2	•	•

EXSKS-05 KATANA

EXS-05 TYPE — End Mill

Fig. 1

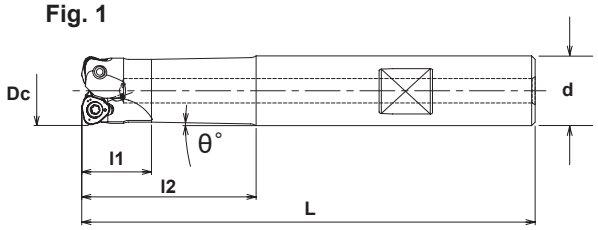

Fig. 2

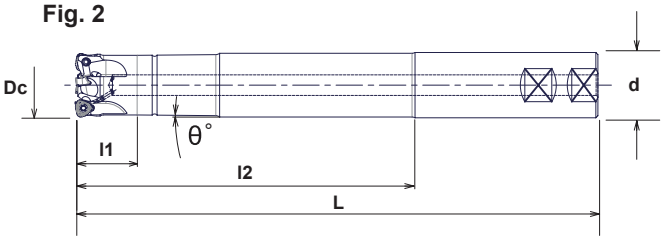

G-Body

Specifications - Inch

CATALOG NUMBER	STK	DIMENSIONS						FIG.	INSERT	Q	PARTS	
		Dc	L	l1	l2	d	θ°				Screw	Wrench
EXS-2075-2.0-05-S075LG	•	.750	5.00	.787	2.00	.750	1	1	WNMU050320ZER-PM	2	TSW-307H	T-10
EXS-2075-4.0-05-S075LG	•	.750	7.00	.787	4.00	.750	0.5	1		2		
EXS-2075-6.0-05-S075LG	•	.750	9.00	.787	6.00	.750	0.25	2		2		
EXS-3100-2.5-05-S100LG	•	1.00	6.00	.984	2.50	1.00	1	1		3		
EXS-3100-4.5-05-S100LG	•	1.00	8.00	1.18	4.50	1.00	0.5	1		3		
EXS-2100-6.5-05-S100LG	•	1.00	10.00	1.18	6.50	1.00	0.25	2		2		
EXS-4125-2.5-05-S125LG	•	1.25	6.00	1.18	2.50	1.25	1	1		4		
EXS-4125-4.5-05-S125LG	•	1.25	8.00	1.18	4.50	1.25	0.5	1		4		
EXS-4125-6.5-05-S125LG	•	1.25	10.00	1.18	6.50	1.25	0.5	2		4		
EXS-5150-2.0-05-S125LG	★	1.50	7.00	-	2.00	1.25	-	1		5		
EXS-5150-3.0-05-S125LG	★	1.50	8.00	-	3.00	1.25	-	1		5		

★ Coming soon

Note: All cutters supplied without inserts, wrench, & moly.

EXSKS-05 TYPE — End Mill

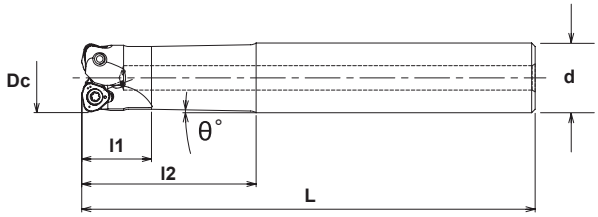

Specifications - Metric

CATALOG NUMBER	STK	DIMENSIONS						INSERT	Q	PARTS	
		Dc	L	l1	l2	d	θ°			Screw	Wrench
EXSKS-2020-05-50-S20	•	20	130	20	50	20	1	WNMU050320ZER-PM	2	TSW-307H	T-10
EXSKS-2020-05-80-S20	•	20	160	20	80	20	0.5		2		
EXSKS-2021-05-50-S20	•	21	130	20	50	20	1		2		
EXSKS-2021-05-80-S20	•	21	160	20	80	20	0.5		2		
EXSKS-3025-05-60-S25	•	25	140	25	60	25	1		3		
EXSKS-3025-05-100-S25	•	25	180	25	100	25	0.5		3		
EXSKS-3026-05-60-S25	•	26	140	25	60	25	1		3		
EXSKS-3026-05-100-S25	•	26	180	25	100	25	0.5		3		
EXSKS-4032-05-70-S32	•	32	150	32	70	32	1.5		4		
EXSKS-4032-05-120-S32	•	32	200	32	120	32	0.5		4		

Note: All cutters supplied without inserts, wrench, & moly.

EXSKS-05 KATANA

INCH METRIC

EXSKS-05 TYPE

Face Mill

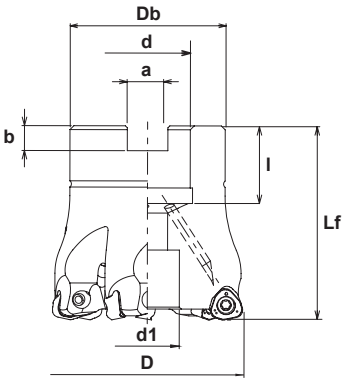

Specifications - Metric

	CATALOG NUMBER	STK	DIMENSIONS								INSERT	Q	PARTS
			D	Lf	Db	d	d1	a	b	l			
INCH	EXSKS-5200R-05-075	★	2.00	2.00	1.77	.750	.590	.319	.197	.750	WNMU050320ZER-PM	5	TSW-307H T-10
INCH	EXSKS-7200R-05-075	★	2.00	2.00	1.77	.750	.590	.319	.197	.750		7	
METRIC	EXSKS-5040R-05-16	•	40	45	35	16	13.5	8.4	5.8	19		5	
METRIC	EXSKS-7050R-05-22	•	50	50	40	22	16.5	10.4	6.3	20		7	
METRIC	EXSKS-7052R-05-22	⦿	52	50	40	22	16.5	10.4	6.3	20		7	
METRIC	EXSKS-8063R-05-22	•	63	50	48	22	17	10.4	6.3	20		8	

⦿ - delivery may be longer

★ Coming soon

Note: All cutters supplied without inserts, wrench, & moly.

Cutting Data

EXSKS-05

1. Machining on INVAR36

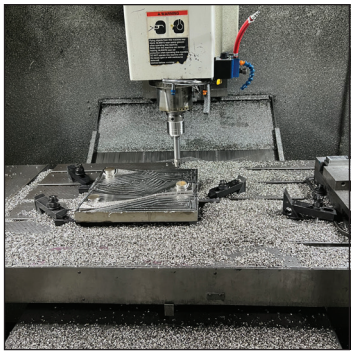

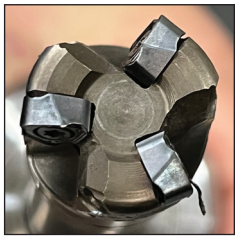

Work Piece	Parts
Material	Invar36
Hardness	
Catalog Number	MEX-3100-05-M12
	WNMU050320ZER-PM (JC8118)
n	1,400 rpm
Vc	367 sfm
Vf	157 (ipm)
fz	.037 (ipt)
ap	.030”
ae	.600”
Reach	5”
Coolant	Air (internal)
Machine	Vertical MC

Result

No wear after 140 minutes of machining.
Machining is stable and quiet - even when workpiece is thin.

Cutting Data

EXSKS-05

2. Machining on Carbon steel

Work	Part Name		Test Piece
	Material		(1018) Carbon Steel
	Hardness		
Tool	Tool No.		MEX-3025-05-M12
	Insert No.		WNMU050320ZER-PM (JC8118)
Cutting Conditions	Spindle Speed Cutting Speed	n	2,000 (min-1)
		Vc	157 (m/min)
	Feed Speed	Vt	5,600 (mm/min)
		fz	0.93 (mm/t)
	ap (mm)		0.762 (mm)
	ae (mm)		15.24 (mm)
	Coolant		Air (external)
	Machine		Vertical MC

Result

Possible to process with normal wear even in pocket milling.

3. Machining on Stainless steel

Work	Part Name		Parts
	Material		17-4 Stainless Steel
	Hardness		-
Tool	Tool No.		MEX-3025-05-M12
	Insert No.		WNMU050320ZER-PM (JC8118)
Cutting Conditions	Spindle Speed Cutting Speed	n	1,719 (min-1)
		Vc	137 (m/min)
	Feed Speed	Vt	6,985 (mm/min)
		fz	1.35 (mm/t)
	ap (mm)		0.762 (mm)
	ae (mm)		12.7 (mm)
	Coolant		Air (external)
	Machine		Vertical MC

Result

No wear even after 60 minutes of cutting.
Even with overhung length (L/D=6), machines smoothly.

EXSKS-05 KATANA

INCH METRIC

Definition of corner shape for programming

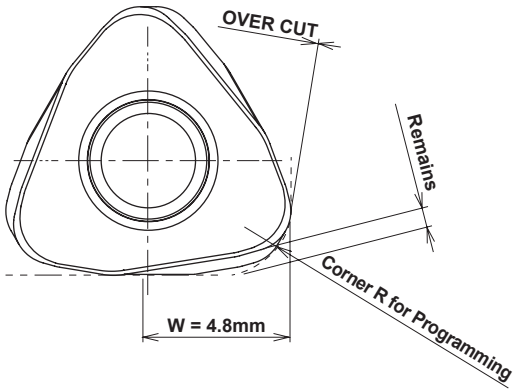

Corner Radius for Programming	Over Cut	Remains
R2.0	0	0.59
R2.5 (Standard)	0	0.5
R3.0	0.13	0.41

(mm)

Recommended Data for Profile Milling

Ramping

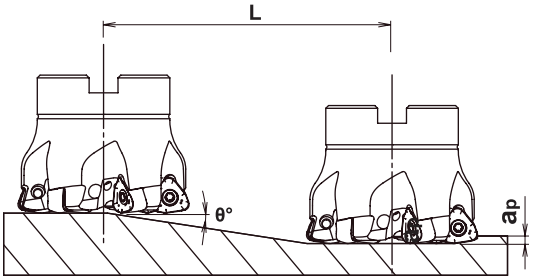

Helical Interpolation

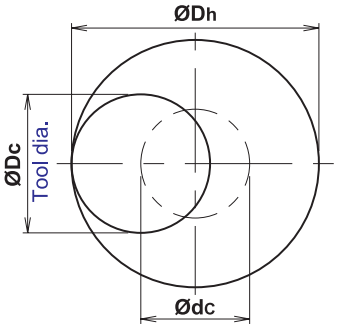

- Calculation of tool pass dia.

Ødc = ØDh - ØDc

Tool pass dia. Bore dia. Tool Dia.

- **Depth of cut per one circuit should not exceed max. depth of cut AP**
- **Down cutting is recommended so tool pass rotation should be counterclockwise.**

- **In case of ramping and helical interpolation, apply 70% or less feed speed from standard cutting condition table.**
- **In case of drilling apply 50% or less Z axis feed speed from standard cutting condition table.**
- **Long consecutive chips may come out in case of drilling, confirm safe operating conditions.**

	TOOL DIAMETER Dc	EFFECTIVE CUTTING DIA.	MAX. DEPTH OF CUT: AP	RAMPING		HELICAL INTERPOLATION		MAX. DRILLING DEPTH
				Max Ramp Angle	Total Cutting Length at Max. AP: L	Min Bore Diameter: Dh min	Max Bore Diameter: Dh max	
INCH	.750”	.37”	.059”	3°	1.13”	1.02”	1.34”	.016”
INCH	1.00”	.61”	.059”	1.8°	1.88”	1.54”	1.81”	.016”
INCH	1.25”	.86”	.059”	1.2°	2.82”	2.01”	2.32”	.016”
INCH	1.50”	1.11”	.059”	0.9°	3.76”	2.52”	2.83”	.016”
METRIC	20	10	1.5	2.8°	31	28	36	0.4
METRIC	21	11	1.5	2.6°	34	30	38	0.4
METRIC	25	15	1.5	1.8°	48	38	46	0.4
METRIC	26	16	1.5	1.7°	51	40	48	0.4
METRIC	28	18	1.5	1.5°	58	44	52	0.4
METRIC	30	20	1.5	1.3°	67	48	56	0.4
METRIC	32	22	1.5	1.2°	72	52	60	0.4
METRIC	33	23	1.5	1.1°	79	54	62	0.4
METRIC	35	25	1.5	1°	86	58	66	0.4
METRIC	40	30	1.5	0.8°	108	68	76	0.4
METRIC	50	40	1.5	0.6°	144	88	96	0.4
METRIC	52	42	1.5	0.6°	144	92	100	0.4
METRIC	63	53	1.5	0.5°	172	114	122	0.4

Recommended Cutting Data for EXSKS-05

Material	Grade	SFM	IPT	DOC	WOC
Gray Cast Iron	JC8118	600	.055"	.025”-.045”	70%
Nodular Cast Iron	JC8118	550	.045”	.025”-.045”	70%
Carbon Steel	JC8050	500	.040”	.020”-.040”	70%
Low Alloy Steel	JC8050	450	.040”	.020”-.040”	70%
Mold Steel	JC8118	400	.040”	.020”-.035”	60%
Tool & Die Steel (40-50 HRC)	JC8118	300	.030”	.020”-.025”	60%
Stainless (Austenitic)	JC8050	300	.040”	.020”-.025”	40%-60%
Stainless (Martensitic)	JC8118	400	.040”	.020”-.035”	40%-60%

NOTE: 1. The figure to be adjusted according to the machine rigidity or work rigidity.
2. If chatter occurs, recommend reducing DOC or spindle speed & maintain IPT.
3. If machine does not have enough power, reduce DOC or spindle speed & feed.
4. Use air only.

Additional Cutting Data For Longer Tools

Reach/Dia.	~4.0	4.0~4.5	4.5~5.3	5.3~5.7	5.7~6.2	6.3~
rpm %	100	90	80	80	75	70
Feed %	100	90	90	80	75	70

NOTE: The above percentages should be applied, according to tool ratio.

Reduced Cutting Data For Cutting Pattern

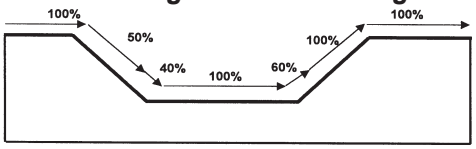

NOTE: Feed should be reduced when cutting the above pattern

EXSKS-07 Series

INCH METRIC

EXSKS-07 TYPE

Face Mill

G-Body

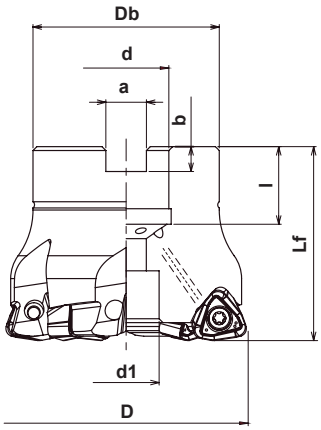

Specifications - Inch

CATALOG NUMBER	STK	DIMENSIONS								INSERT	Q	PARTS	
		D	Lf	Db	d	d1	a	b	l			Screw	Wrench
EXSKS-4200R-07-075	•	2.00	2.00	1.77	.750	.590	.319	.197	.750	WNMU070620ZER-PM	4	TSW-410H	A-15T
EXSKS-5200R-07-075	•	2.00	2.00	1.77	.750	.590	.319	.197	.750		5		
EXSKS-6250R-07-100	•	2.50	2.00	1.89	1.00	.787	.374	.236	.945		6		
EXSKS-7300R-07-100	•	3.00	2.00	2.85	1.00	.787	.374	.236	.945		7		
EXSKS-7300R-07-125	•	3.00	2.50	2.85	1.25	1.024	.500	.315	1.26		7		
EXSKS-7400R-07-150	•	4.00	2.25	3.78	1.50	1.189	.636	.394	1.00		7		

Note: All cutters are supplied without insert, wrench & moly.

G-Body

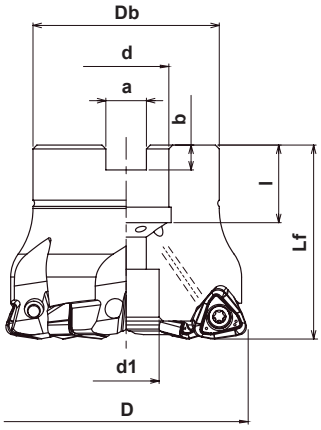

Specifications - Metric

CATALOG NUMBER	STK	DIMENSIONS								INSERT	Q	PARTS	
		D	Lf	Db	d	d1	a	b	l			Screw	Wrench
EXSKS-5050R-07-22	•	50	50	40	22	16.5	10.4	6.3	20	WNMU070620ZER-PM	5	TSW-410H	A-15T
EXSKS-5052R-07-22	○	52	50	40	22	16.5	10.4	6.3	20		5		
EXSKS-6063R-07	•	63	50	48	22.225	17	10.4	5	20		6		
EXSKS-6063R-07-22	•	63	50	48	22	17	10.4	6.3	20		6		
EXSKS-7080R-07	•	80	70	65	31.75	26	12.7	8	32		7		
EXSKS-7080R-07-27	•	80	55	65	27	20	12.4	7	22		7		

○ - longer delivery may apply.

Note: All cutters are supplied without insert, wrench & moly.

INCH METRIC

EXSKS-07 Series

EXS & EXSKS-07 TYPE

End Mill

●In case φDc= φ1.25”

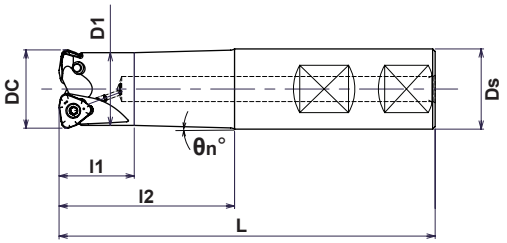

●In case φDc= φ1.50”

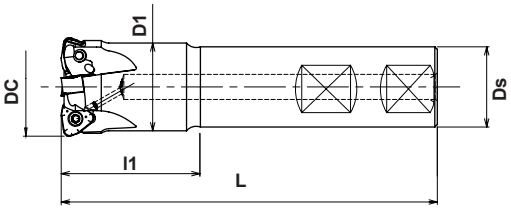

G-Body

Specifications - Inch

CATALOG NUMBER	STK	DIMENSIONS							INSERT	Q	PARTS	
		Dc	l1	l2	L	D1	Ds	θn°			Screw	Wrench
EXS-2125-07-2.0-S125LG	•	1.25	1.18	2.00	7.00	1.14	1.25	1.5°	WNMU070620ZER-PM	2	TSW-410H	A-15T
EXS-2125-07-3.0-S125LG	•	1.25	1.18	3.00	8.00	1.14	1.25	1°		2		
EXS-3150-07-3.0-S125LG	•	1.50	3.00	-	7.00	1.30	1.25	-		3		
EXS-3150-07-4.75-S125LG	•	1.50	4.75	-	8.00	1.30	1.25	-		3		

Note: All cutters are supplied without inserts, wrench & moly.

●In case φDc= φ32

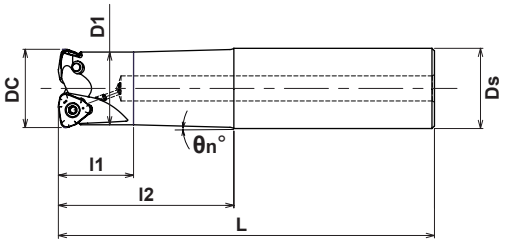

●In case φDc= φ35 or 40

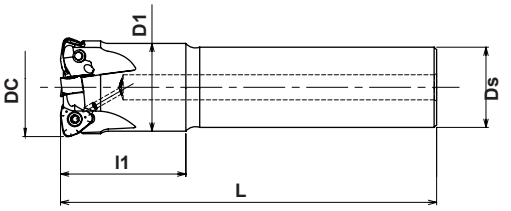

Specifications - Metric

CATALOG NUMBER	STK	DIMENSIONS							INSERT	Q	PARTS	
		Dc	l1	l2	L	D1	Ds	θn°			Screw	Wrench
EXSKS-2032-07-70-S32	•	32	30	70	150	29	32	1.5°	WNMU070620ZER-PM	2	TSW-410H	A-15T
EXSKS-2032-07-120-S32	•	32	30	120	200	29	32	0.6°		2		
EXSKS-3035-07-40-S32	•	35	40	-	150	31	32	-		3		
EXSKS-3035-07-40L-S32	•	35	40	-	200	31	32	-		3		
EXSKS-4040-07-50-S32	•	40	50	-	150	35	32	-		4		
EXSKS-4040-07-50L-S32	•	40	50	-	200	35	32	-		4		

Note: All cutters are supplied without inserts, wrench & moly.

EXSKS-07 Series

INCH METRIC

MEX-07 TYPE — Modular Head

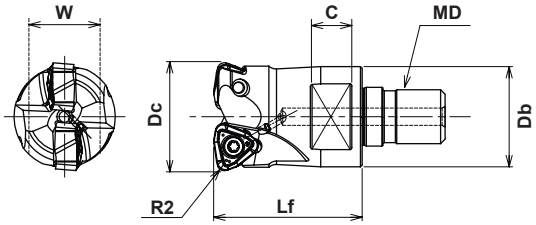

G-Body

Specifications

	CATALOG NUMBER	STK	DIMENSIONS						HEAD TORQUE		INSERT	Q	PARTS	
			Dc	Lf	Db	MD	C	W	LBS/FT	Nm			Screw	Wrench
INCH	MEX-2125-07-M16	•	1.25	1.69	1.14	M16	12	22	18.4	25	WNMU070620ZER-PM	2	TSW-410H	T-15
INCH	MEX-3150-07-M16	•	1.50	1.69	1.14	M16	12	22	18.4	25		3		
METRIC	MEX-2032-07-M16	•	32	43	29	M16	12	22	18.4	25		2		
METRIC	MEX-3035-07-M16	•	35	43	29	M16	12	22	18.4	25		3		
METRIC	MEX-4040-07-M16	•	40	43	32	M16	14	26	18.4	25		4		
METRIC	MEX-4042-07-M16	○	42	43	32	M16	14	26	18.4	25		4		

○ - longer delivery may apply.

Note: All cutters are supplied without inserts, wrench & moly.

Note: Modular Head holders on page 27

WNMU-07 TYPE — Insert

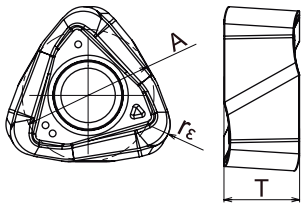

Catalog Number	Tolerance	PVD Coated		Dimensions (mm)		
		JC8050	JC8118	A	T	rε
WNMU070620ZER-PM	M	●	●	11.2	6.4	2

● Each grade shows different mark around the hole for identification.

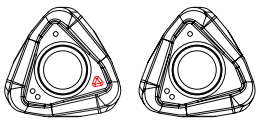

JC8050 JC8118

INCH METRIC

EXSKS-07 Series

Cutting Data

EXSKS-07

1. Roughing slope surface

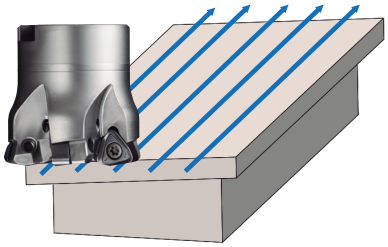

Result

After 427m, still able to continue. Compared with Competitor F, tool cost can be reduced, due to increased number of insert corners (from 4 to 6 corners).

Work	Part Name		Large welding jig
	Material		A36
	Hardness		-
Tool	Tool No.		EXSKS-5050R-07-22
	Insert No.		WNMU070620ZER-PM (JC8050)
Cutting Conditions	Cutting Speed	n	800 (min-1)
		Vc	125 (m/min)
	Feed Speed	Vt	6,000 (mm/min)
		fz	1.5 (mm/t)
	ap (mm)		1.5 (mm)
	ae (mm)		35 (mm)
	Coolant		External
	Machine		Vertical MC

4137

2. Helical interpolation (roughing)

Overhung length: 150mm

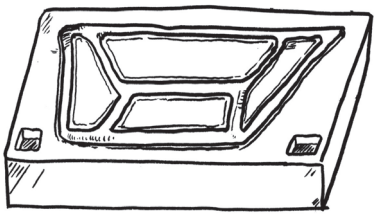

Result

After 1.5 hours, showed normal wear (still able to continue). No chatter even in case of twice the feed speed (Vf) of competitor F.

Work	Part Name		Press die for automobile
	Material		Die steel
	Hardness		30HRC
Tool	Tool No.		EXSKS-5050R-07-22
	Insert No.		WNMU070620ZER-PM (JC8118)
Cutting Conditions	Cutting Speed	n	850 (min-1)
		Vc	133 (m/min)
	Feed Speed	Vt	2,400 (mm/min)
		fz	0.56 (mm/t)
	ap (mm)		1.0 (mm)
	ae (mm)		72 (mm)
	Coolant		Air (External)
	Machine		Double column MC

4392

3. Helical interpolation (roughing)

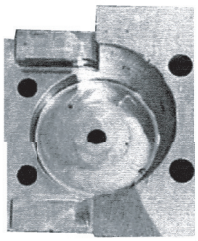

Result

After 5 hours, showed normal wear (still able to continue). Achieved 2.5 times longer tool life per corner compared with competitor A. (Machining time (EXSKS-07): 5 hour per corner)

Work	Part Name		Die casting mold
	Material		P20
	Hardness		30HRC
Tool	Tool No.		EXSKS-5050R-07-22
	Insert No.		WNMU070620ZER-PM (JC8118)
Cutting Conditions	Cutting Speed	n	850 (min-1)
		Vc	133 (m/min)
	Feed Speed	Vt	4,000 (mm/min)
		fz	0.94 (mm/t)
	ap (mm)		1.0 (mm)
	ae (mm)		30 (mm)
	Coolant		Air (External)
	Machine		Vertical MC

4342

EXSKS-07 Series

INCH METRIC

Definition of corner shape for programming

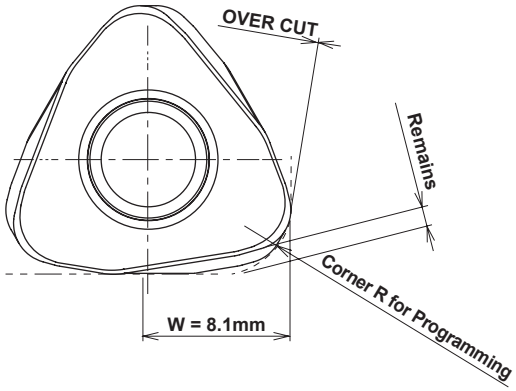

Corner Radius for Programming	Over Cut	Remains
R3.0 (Standard)	0	0.8
R3.5	0.06	0.73
R4.0	0.21	0.66

(mm)

Recommended Data for Profile Milling

Ramping

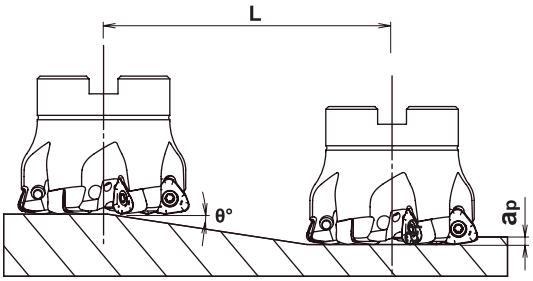

Helical Interpolation

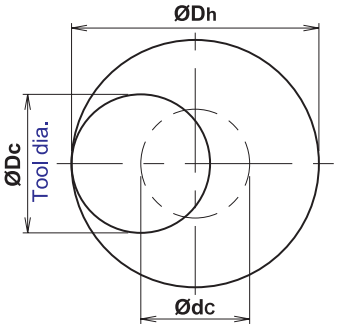

• Calculation of tool pass dia.

Ødc = ØDh - ØDc

Tool pass dia. Bore dia. Tool Dia.

- **Depth of cut per one circuit should not exceed max. depth of cut AP**
- **Down cutting is recommended so tool pass rotation should be counterclockwise.**

- **In case of ramping and helical interpolation, apply 70% or less feed speed from standard cutting condition table.**
- **In case of drilling apply 50% or less Z axis feed speed from standard cutting condition table.**
- **Long consecutive chips may come out in case of drilling, confirm safe operating conditions.**

	TOOL DIAMETER Dc	EFFECTIVE CUTTING DIA.	MAX. DEPTH OF CUT: AP	RAMPING		HELICAL INTERPOLATION		MAX. DRILLING DEPTH
				Max Ramp Angle	Total Cutting Length at Max. AP: L	Min Bore Diameter: Dh min	Max Bore Diameter: Dh max	
INCH	1.25”	.581”	.079”	2.2°	2.06”	1.59”	2.34”	.024”
	1.50”	.831”	.079”	2.0°	2.27”	2.09”	2.84”	.024”
	2.00”	1.33”	.079”	1.3°	3.49”	3.09”	3.84”	.024”
	2.50”	1.83”	.079”	0.9°	5.03”	4.09”	4.84”	.024”
	3.00”	2.33”	.079”	0.6°	7.55”	5.09”	5.84”	.024”
	4.00”	3.33”	.079”	0.5°	9.06”	7.09”	7.84”	.024”
METRIC	32	15	2	2.2°	53	41	60	0.6
	35	18	2	2.1°	55	47	66	0.6
	40	23	2	2.0°	58	57	76	0.6
	42	25	2	1.8°	64	61	80	0.6
	50	33	2	1.5°	77	77	96	0.6
	52	35	2	1.2°	96	81	100	0.6
	63	46	2	1.0°	115	103	122	0.6
	80	63	2	0.8°	144	137	156	0.6

Recommended Cutting Data for EXSKS-07

Material	Grade	SFM	IPT	DOC	WOC
Gray Cast Iron	JC8118	600	.060"	.060" - .080"	70%
Nodular Cast Iron	JC8118	550	.060”	.040" - .060"	70%
Carbon Steel	JC8050	500	.060”	.040" - .060"	70%
Low Alloy Steel	JC8050	450	.060”	.040" - .060"	70%
Mold Steel	JC8118	400	.060”	.040" - .060"	60%
Tool & Die Steel (40-50 HRC)	JC8118	300	.040”	.020" - .040"	60%
Stainless (Austenitic) (300 Series)	JC8050	300	.050”	.030" - .050"	40-60%
Stainless (Martensitic) (400 Series)	JC8118	400	.050”	.020" - .040"	40-60%

NOTE: 1. The figure to be adjusted according to the machine rigidity or work rigidity.
2. If chatter occurs, recommend reducing DOC or spindle speed & maintain IPT.
3. If machine does not have enough power, reduce DOC or spindle speed & feed.
4. Use air only.

Additional Cutting Data For Longer Tools

Reach/Dia.	~4.0	4.0~4.5	4.5~5.3	5.3~5.7	5.7~6.2	6.3~
rpm %	100	90	80	80	75	70
Feed %	100	90	90	80	75	70

NOTE: The above percentages should be applied, according to tool ratio.

Reduced Cutting Data For Cutting Pattern

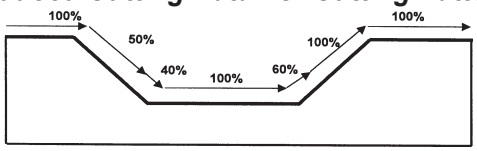

NOTE: Feed should be reduced when cutting the above pattern

EXSKS-09 Series

INCH

EXSKS TYPE

Face Mill

G-Body

Fig. 1
Coolant thru

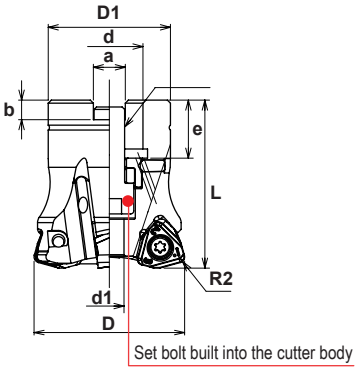

Fig. 2
Coolant thru

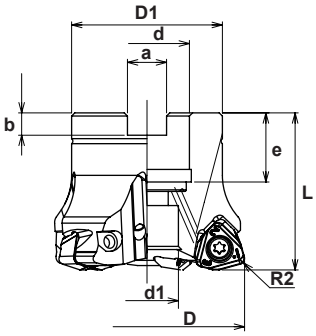

Fig. 3
Not Coolant thru

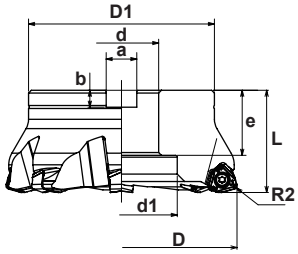

Specifications - Inch

CATALOG NUMBER	STK	DIMENSIONS								FIG.	INSERT	Q	PARTS	
		D	L	d	D1	a	b	e	d1				Screw	Wrench
EXSKS-4200-75R	•	2.00	2.25	.750	1.77	.319	.196	.750	.378	1	WNMU090720ZER-PM WNMU090828ZER-PL	4	CSW-513H	A-20
EXSKS-5250-75R	•	2.50	2.00	.750	2.36	.319	.196	.750	.630	2		5		
EXSKS-6300-100R	•	3.00	2.00	1.00	2.85	.374	.236	.750	.827	2		6		
EXSKS-6300-125R	•	3.00	2.50	1.25	2.85	.500	.315	1.25	1.02	2		6		
EXSKS-7400-150R	•	4.00	2.25	1.50	3.78	.626	.393	1.50	1.19	2		7		
EXSKS-8500-150R	•	5.00	2.25	1.50	3.34	.626	.393	1.50	2.36	3		8		
EXSKS-9600-150R	•	6.00	2.25	1.50	3.93	.626	.393	1.50	2.36	3		9		

Note: All cutters are supplied without inserts, wrench & moly.

METRIC

EXSKS-09 Series

EXSKS TYPE

Face Mill

G-Body

Fig. 1
Coolant thru

Fig. 2
Coolant thru

Fig. 3
Not Coolant thru

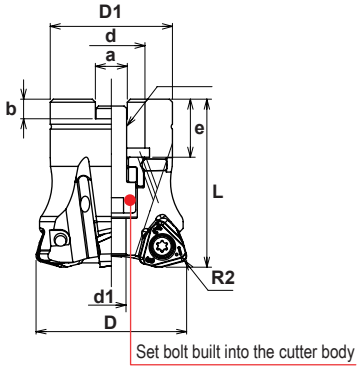

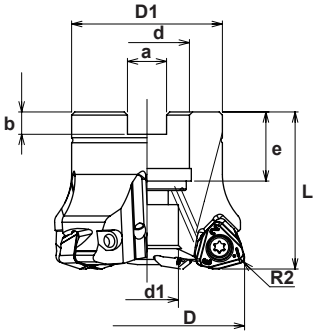

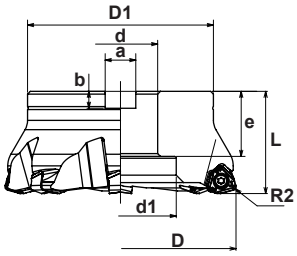

Specifications - Metric

CATALOG NUMBER	STK	DIMENSIONS								FIG.	ARBOR BOLT	Q	INSERT &PARTS
		D	L	d	D1	a	b	e	d1				
EXSKS-3050R	•	50	55	22.225	40	8.4	5	19	9.6	1	M10X1.5X25*	3	WNMU090720ZER-PM WNMU090828ZER-PL CSW-513H A-20
EXSKS-3050R-22	•	50	55	22	40	10.4	6.3	19	9.6	1	M10X1.5X25*	3	
EXSKS-4050R	•	50	55	22.225	40	8.4	5	19	9.6	1	M10X1.5X25*	4	
EXSKS-4050R-22	•	50	55	22	40	10.4	6.3	19	9.6	1	M10X1.5X25*	4	
EXSKS-4052R-22	○	52	50	22	40	10.4	6.3	20	17	2	M10	4	
EXSKS-4063R	•	63	50	22.225	48	8.4	5	20	17	2	M10	4	
EXSKS-4063R-22	•	63	50	22	48	10.4	6.3	20	17	2	M10	4	
EXSKS-5063R	•	63	50	22.225	48	8.4	5	20	17	2	M10	5	
EXSKS-5063R-22	•	63	50	22	48	10.4	6.3	20	17	2	M10	5	
EXSKS-5063R-27	•	63	50	27	48	12.4	7	22	20	2	M12X1.75X30*	5	
EXSKS-5066R-27	○	66	50	27	48	12.4	7	22	20	2	M12X1.75X30*	5	
EXSKS-6080R	•	80	70	31.75	65	12.7	8	32	26	2	M16	6	
EXSKS-6080R-27	•	80	55	27	65	12.4	7	22	37	3	M12X1.75X40*	6	
EXSKS-7100R	•	100	70	31.75	70	12.7	8	32	26	3	M16	7	
EXSKS-7100R-32	•	100	55	32	85	14.4	8	32	45	3	M16X2X45*	7	
EXSKS-8125R	•	125	63	37.1	100	15.9	10	35	60	3	M20X2.5X45*	8	
EXSKS-8125R-40	•	125	55	40	100	16.4	9	35	60	3	M20X2.5X45*	8	
EXSKS-9160R	•	160	63	50.8	100	19	11	43	75	3	M24	9	
EXSKS-9160R-40	•	160	55	40	100	16.4	9	35	85	3	M20	9	

○ - longer delivery may apply. **Note: All cutters are supplied without inserts, wrench & moly.**

*** Arbor bolt included on cutters marked with * under arbor bolt. All other cutters use bolt supplied with arbor.**

EXSKS-09 Series

METRIC

WNMU-09 TYPE

Insert

WNMU090720ZER-PM

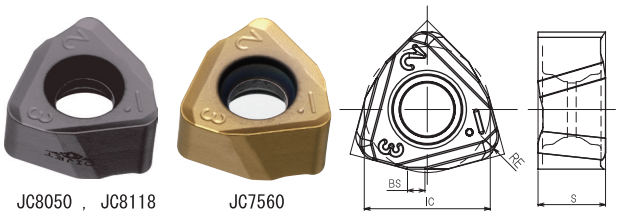

JC8050 , JC8118 JC7560

WNMU090828ZER-PL

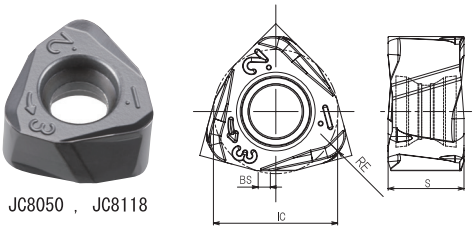

JC8050 , JC8118

CATALOG NUMBER	TOLERANCE	DIMENSIONS (mm)				PVD COATED		
		IC	S	BS	RE	JC8050	JC8118	JC7560
WNMU090720ZER-PM	M	14	7.66	1.94	2	•	•	•
WNMU090828ZER-PL	M	13.91	8.66	1.37	2.8	•	•	

● Each grade shows different mark around the hole for identification.

WNMU090720ZER-PM

JC8050 JC8118 JC7560

WNMU090828ZER-PL

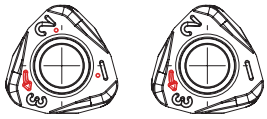

JC8050 JC8118

Definition of corner shape for programming

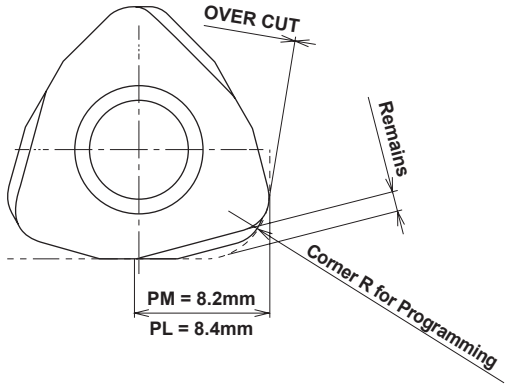

Insert: WMNU090720ZER-PM

Corner Radius for Programming	Over Cut	Remains
R3.0	0	1.41
R3.5	0	1.30
R4.0	0.025	1.19

(mm)

Insert: WMNU090828ZER-PL

Corner Radius for Programming	Over Cut	Remains
R3.0	0	1.18
R3.5	0	1.06
R4.0	0.025	0.95

(mm)

INCH METRIC

EXSKS-09 Series

Cutting Data

EXSKS-09

1. High feed machining of high hardened die steel

Surface roughing

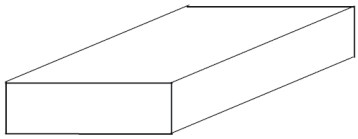

150x300x500mm

Gauge length: **170mm**

Result

Achieved 2.4 times better efficiency compared with our conventional tool.

Work	Part Name		Plate
	Material		H13
	Hardness		40HRC
Tool	Tool No.		EXSKS-7100R
	Insert No.		WNMU090720ZER-PM (JC8118)
Cutting Conditions	Cutting Speed	n	250 (min-1)
		Vc	80 (m/min)
	Feed Speed	Vt	1,400 (mm/min)
		fz	0.8 (mm/t)
	ap (mm)		0.7 (mm)
	ae (mm)		70 (mm)
	Coolant		Air (External)
	Machine		Double column MC (BT50) 22KW

3552

2. High feed milling of mold steel

Roughing of shape

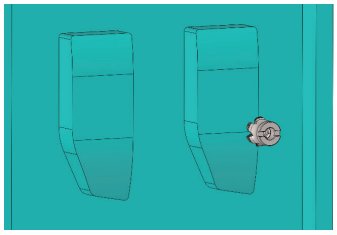

Overhung length: **180mm**

Result

1.5 times longer tool life compared with competitor A. Both cutting noise and cutting force are reduced..

Work	Part Name		Lamp mold (Nest)
	Material		P21
	Hardness		-
Tool	Tool No.		EXSKS-6080R
	Insert No.		WNMU090828ZER-PL (JC8118)
Cutting Conditions	Cutting Speed	n	600 (min-1)
		Vc	150 (m/min)
	Feed Speed	Vt	3,600 (mm/min)
		fz	1.0 (mm/t)
	ap (mm)		1 (mm)
	ae (mm)		56 (mm)
	Coolant		Air (External)
	Machine		Horizontal MC (BT50)

4747

3. High feed milling of plastic mold

Roughing of shape

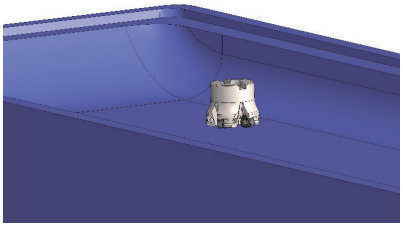

Overhung length: **200mm**

Result

Achieved same efficiency against competitor F even when the number of teeth is 5 (1 piece less than competitor). Tool cost is reduced.

Work	Part Name		Automotive exterior parts molds
	Material		1055
	Hardness		-
Tool	Tool No.		EXSKS-5063R
	Insert No.		WNMU090828ZER-PL (JC8050)
Cutting Conditions	Cutting Speed	n	580 (min-1)
		Vc	115 (m/min)
	Feed Speed	Vt	4,640 (mm/min)
		fz	1.6 (mm/t)
	ap (mm)		1.2 (mm)
	ae (mm)		44 (mm)
	Coolant		Water (External)
	Machine		Vertical MC (BT50)

3603

EXSKS-09 Series

INCH METRIC

Recommended Data for Profile Milling for EXSKS-09

Ramping

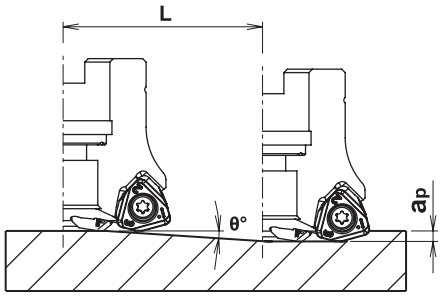

Helical Interpolation

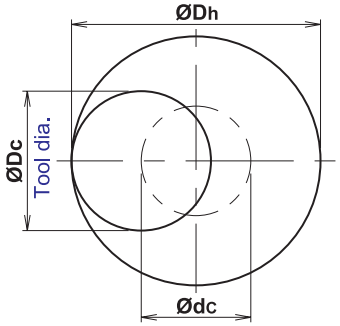

- Calculation of tool pass dia.

Ødc = ØDh - ØDc

Tool pass dia. Bore dia. Tool Dia.

- **Depth of cut per one circuit should not exceed max. depth of cut AP**
- **Down cutting is recommended so tool pass rotation should be counterclockwise.**

- **In case of ramping and helical interpolation, apply 70% or less feed speed from standard cutting condition table.**
- **In case of drilling apply 50% or less Z axis feed speed from standard cutting condition table.**
- **Long consecutive chips may come out in case of drilling, confirm safe operating conditions.**

For WNMU090720ZER-PM insert

	CATALOG NUMBER	TOOL DIAMETER	EFFECTIVE CUTTING DIA.	MAX. DEPTH OF CUT: AP	RAMPING		HELICAL INTERPOLATION		MAX. DRILLING DEPTH
					Max Ramp Angle	Total Cutting Length at Max. AP: L	Min Bore Diameter: Dh min	Max Bore Diameter: Dh max	
INCH	EXSKS-*200	2.00”	1.36”	0.12”	2.4°	2.83”	2.93”	3.82”	.043”
INCH	EXSKS-*250	2.50”	1.86”	0.12”	1.8°	3.78”	3.93”	4.84”	.047”
INCH	EXSKS-*300	3.00”	2.36”	0.12”	1.4°	4.84”	4.93”	5.84”	.051”
INCH	EXSKS-*400	4.00”	3.35”	0.12”	1°	6.77”	6.93”	7.84”	.051”
INCH	EXSKS-*500	5.00”	4.35”	0.12”	0.8°	8.46”	8.93”	9.84”	.051”
INCH	EXSKS-*600	6.00”	5.35”	0.12”	0.7°	9.69”	10.93”	11.84”	.067”
METRIC	EXSKS-*050	50	33.7	3	2.5°	69	73	96	1.1
METRIC	EXSKS-*052	52	35.7	3	2.4°	72	77	100	1.2
METRIC	EXSKS-*063	63	46.7	3	1.8°	96	99	122	1.2
METRIC	EXSKS-*066	66	49.7	3	1.7°	102	105	128	1.2
METRIC	EXSKS-*080	80	63.6	3	1.3°	133	133	156	1.3
METRIC	EXSKS-*100	100	83.6	3	1°	172	173	196	1.3
METRIC	EXSKS-*125	125	108.5	3	0.9°	191	223	246	1.3
METRIC	EXSKS-*160	160	143.5	3	0.7°	246	293	316	1.7

For WNMU090828ZER-PL insert

	CATALOG NUMBER	TOOL DIAMETER	EFFECTIVE CUTTING DIA.	MAX. DEPTH OF CUT: AP	RAMPING		HELICAL INTERPOLATION		MAX. DRILLING DEPTH
					Max Ramp Angle	Total Cutting Length at Max. AP: L	Min Bore Diameter: Dh min	Max Bore Diameter: Dh max	
INCH	EXSKS-*200	2.00”	1.34”	.08”	2.2°	2.09”	2.97”	3.84”	.039”
INCH	EXSKS-*250	2.50”	1.83”	.08”	1.7°	2.68”	3.97”	4.84”	.047”
INCH	EXSKS-*300	3.00”	2.34”	.08”	1.3°	3.50”	4.97”	5.84”	.051”
INCH	EXSKS-*400	4.00”	3.33”	.08”	1°	4.53”	6.97”	7.84”	.051”
INCH	EXSKS-*500	5.00”	4.33”	.08”	0.9°	5.04”	8.97”	9.84”	.055”
INCH	EXSKS-*600	6.00”	5.33”	.08”	0.7°	6.46”	10.97”	11.84”	.063”
METRIC	EXSKS-*050	50	33.3	2	2.3°	50	74	96	1
METRIC	EXSKS-*052	52	35.3	2	2.2°	53	78	100	1
METRIC	EXSKS-*063	63	46.2	2	1.8°	64	100	122	1.2
METRIC	EXSKS-*066	66	49.2	2	1.7°	68	106	128	1.2
METRIC	EXSKS-*080	80	63.2	2	1.3°	89	134	156	1.3
METRIC	EXSKS-*100	99.94	83.1	2	1°	115	174	195	1.3
METRIC	EXSKS-*125	124.89	108	2	0.9°	128	224	245	1.4
METRIC	EXSKS-*160	159.85	142.9	2	0.7°	164	294	315	1.6

Recommended Cutting Data for EXSKS-09

Material	Insert / Grade	SFM	IPT	DOC	WOC
Gray Cast Iron	WNMU090720ZER-PM JC8118	700	.070"	.080" - .100"	70%
Nodular Cast Iron	WNMU090720ZER-PM JC8118	650	.060”	.080" - .100"	70%
Carbon Steel	WNMU090720ZER-PM JC7560 (JC8050)	600	.070”	.080" - .100"	70%
Low Alloy Steel	WNMU090720ZER-PM JC7560 (JC8050)	550	.060”	.070" - .090"	70%
Mold Steel	WNMU090720ZER-PM JC7560 (JC8050)	500	.050”	.050" - .070"	60%
Tool & Die Steel (40-50 HRC)	WNMU090828ZER-PL JC8118 (JC8050)	400	.035”	.030" - .050"	60%
Stainless (Austenitic)	WNMU090720ZER-PM JC8050 (JC8118)	250	.040”	.040" - .060"	40-60%
Stainless (Martensitic)	WNMU090720ZER-PM JC8050 (JC8118)	300	.040”	.050" - .070"	40-60%

NOTE: 1. The figure to be adjusted according to the machine rigidity or work rigidity.
2. If chatter occurs, recommend reducing DOC or spindle speed & maintain IPT.
3. If machine does not have enough power, reduce DOC or spindle speed & feed.
4. When using -PL type inserts, depth of cut (ap) must be kept within 2mm.

Additional Cutting Data For Longer Tools

Reach/Dia.	~4.0	4.0~4.5	4.5~5.3	5.3~5.7	5.7~6.2	6.3~
rpm %	100	90	80	80	75	70
Feed %	100	90	90	80	75	70

NOTE: The above percentages should be applied, according to tool ratio.

Reduced Cutting Data For Cutting Pattern

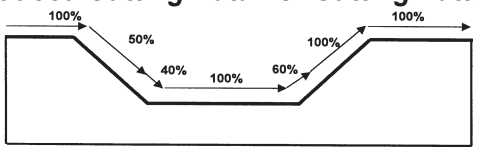

NOTE: Feed should be reduced when cutting the above pattern

PROPER MOUNTING OF MODULAR HEADS

■ Cleaning
Remove dirt and chips with air from the connecting thread and face of modular head and MSN/MGN shank holder.

■ Initial Tightening
Tighten by hand until the head and the shank holder faces touch.

■ Final Tightening
Tighten slowly with torque control spanner wrench or DIJET DS type spanner wrench and confirm that there is no gap.
Attention: Final tightening without initial tightening cause connecting thread damage.

Thread	Tightening torque	Spanner size
M6	8N·m	8 ✧
M8	16N·m	10, 12 ✧
M10	16N·m	14, 15
M12	20N·m	17, 19
M16	25N·m	22, 26

Modular heads are supplied without spanner wrench.

In case of choosing torque control spanner wrench, confirm that the wrench size is matched to the dimensions W & C of each modular head. (There are some cases that modifying the thickness of spanner wrench is necessary)

✧ = DIJET stocks DS-8 and DS-12 type spanner wrenches.

SELECTION OF MSN CARBIDE SHANK HOLDER

Ø Dc – Ø D1 ≥ 1mm

When using modular head over Ø 16mm, **please select MSN carbide shank which the diameter (Ø D1) is 1 mm or smaller than modular head (Ø Dc)**.
Wrong selection can cause damage to the carbide shank.

Coolant or air blow is recommended to remove the chips.

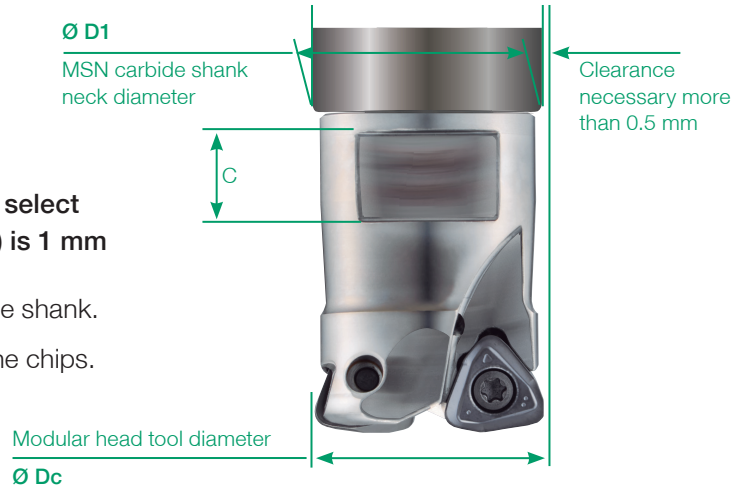

Caution for mounting in shrink fit holder.
When you use a carbide shank and a modular head on a shrink fit holder, please shrink fit only the carbide shank without mounting the modular head. Mount the modular head on the shank after shrink fit operation is complete.

In case of shrink fit MSN shank + modular head together, it will be difficult to loosen due to heat dissapation.

INCH METRIC

EXSKS Series

MODULAR HEAD HOLDERS

MSN TYPE

Solid Carbide Coolant Thru

Fig. 1

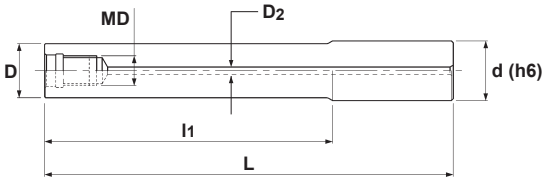

Fig. 2

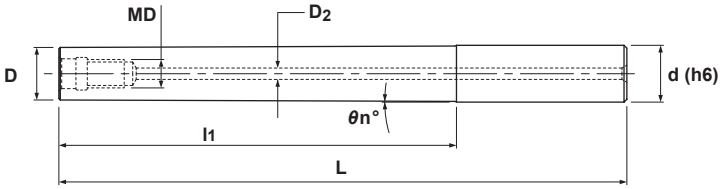

Specifications - Carbide

	CATALOG NUMBER	STK	DIMENSIONS							FIG.
			D	l1	L	d	θn°	MD	D2	
INCH	MSN-M10-0.5-S075C	•	.728	.500	3.50	.750	-	M10	.157	1
	MSN-M10-1.0-S075C	•	.728	1.00	4.00	.750	-	M10	.157	1
	MSN-M10-2.0-S075C	•	.728	2.00	5.00	.750	-	M10	.157	1
	MSN-M10-3.0-S075C	•	.728	3.00	6.00	.750	-	M10	.157	1
	MSN-M10-4.0-S075C	•	.728	4.00	7.00	.750	-	M10	.157	1
	MSN-M10-5.0-S075C	•	.728	5.00	8.00	.750	-	M10	.157	1
	MSN-M10-6.0-S075C	•	.728	6.00	9.00	.750	-	M10	.157	1
	MSN-M12-0.5-S100C	•	.945	.500	3.50	1.00	-	M12	.236	1
	MSN-M12-1.0-S100C	•	.945	1.00	4.00	1.00	-	M12	.236	1
	MSN-M12-2.0-S100C	•	.945	2.00	5.00	1.00	-	M12	.236	1
	MSN-M12-3.0-S100C	•	.945	3.00	6.00	1.00	-	M12	.236	1
	MSN-M12-4.0-S100C	•	.945	4.00	7.00	1.00	-	M12	.236	1
	MSN-M12-5.0-S100C	•	.945	5.00	8.00	1.00	-	M12	.236	1
	MSN-M12-6.0-S100C	•	.945	6.00	9.00	1.00	-	M12	.236	1
	MSN-M12-8.0-S100C	•	.945	8.00	11.00	1.00	-	M12	.236	1
	MSN-M16-0.5-S125C	•	1.14	.500	3.50	1.25	-	M16	.315	1
	MSN-M16-1.0-S125C	•	1.14	1.00	4.00	1.25	-	M16	.315	1
	MSN-M16-2.0-S125C	•	1.14	2.00	5.00	1.25	-	M16	.315	1
	MSN-M16-4.0-S125C	•	1.14	4.00	7.00	1.25	-	M16	.315	1
	MSN-M16-6.0-S125C	•	1.14	6.00	9.00	1.25	-	M16	.315	1
	MSN-M16-8.0-S125C	•	1.14	8.00	11.00	1.25	-	M16	.315	1
METRIC	MSN-M10-20-S20C	•	19.5	20	80	20	-	M10	4	1
	MSN-M10-40-S20C	•	19.5	40	100	20	-	M10	4	1
	MSN-M10-40T-S20C	•	18.5	40	100	20	0°43’	M10	4	2
	MSN-M10-70-S20C	•	19.5	70	130	20	-	M10	4	1
	MSN-M10-85T-S25C	•	18.5	85	161	25	2°	M10	4	2
	MSN-M10-90-S20C	•	19.5	90	150	20	-	M10	4	1
	MSN-M10-90T-S20C	•	18.5	90	150	20	0°19’	M10	4	2
	MSN-M10-140-S20C	•	19.5	140	200	20	-	M10	4	1
	MSN-M10-140T-S20C	•	18.5	140	200	20	0°12’	M10	4	2
	MSN-M10-160-S20C	•	19.5	160	220	20	-	M10	4	1
	MSN-M10-210-S20C	•	19.5	210	270	20	-	M10	4	1

EXSKS Series

METRIC

MODULAR HEAD HOLDERS

MSN TYPE

Solid Carbide Coolant Thru

Fig. 1

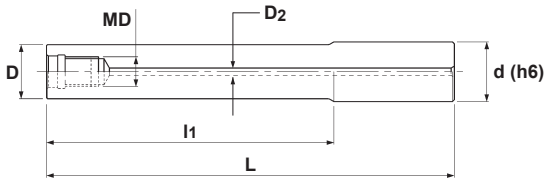

Fig. 2

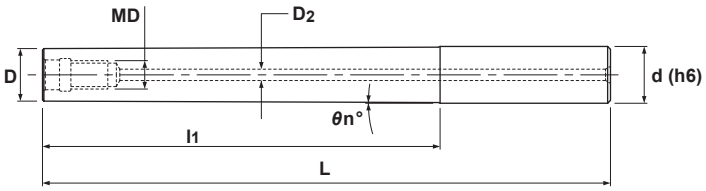

Specifications

CATALOG NUMBER	STK	DIMENSIONS							FIG.
		D	l1	L	d	θn°	MD	D2	
MSN-M12-25-S25C	•	24	25	90	25	-	M12	6	1
MSN-M12-55-S25C	•	24	55	120	25	-	M12	6	1
MSN-M12-100T-S32C	•	23.5	100	180	32	2°	M12	6	2
MSN-M12-105-S25C	•	24	105	170	25	-	M12	6	1
MSN-M12-135-S25C	•	24	135	215	25	-	M12	6	1
MSN-M12-155-S25C	•	24	155	220	25	-	M12	6	1
MSN-M12-200-S25C	•	24	200	265	25	-	M12	6	1
MSN-M16-25-S32C	•	29	25	90	32	-	M16	8	1
MSN-M16-55-S32C	•	29	55	120	32	-	M16	8	1
MSN-M16-77-S32C	•	29	77	157	32	-	M16	8	1
MSN-M16-97-S32C	•	29	97	177	32	-	M16	8	1
MSN-M16-105-S32C	•	29	105	170	32	-	M16	8	1
MSN-M16-117T-S32C	•	29	117	197	32	0°38’	M16	8	2
MSN-M16-127-S32C	•	29	127	207	32	-	M16	8	1
MSN-M16-127T-S32C	•	29	127	207	32	0°30’	M16	8	2
MSN-M16-155-S32C	•	29	155	220	32	-	M16	8	1
MSN-M16-177-S32C	•	29	177	257	32	-	M16	8	1
MSN-M16-177T-S32C	•	29	177	257	32	0°23’	M16	8	2
MSN-M16-195-S32C	•	29	195	260	32	-	M16	8	1
MSN-M16-197T-S32C	•	29	197	277	32	0°23’	M16	8	2
MSN-M16-225-S32C	•	29	225	290	32	-	M16	8	1
MSN-M16-245-S32C	•	29	245	310	32	-	M16	8	1
MSN-M16-295-S32C	•	29	295	360	32	-	M16	8	1

METRIC

EXSKS Series

MODULAR HEAD HOLDERS

MSN TYPE

Solid Carbide Straight Coolant Thru

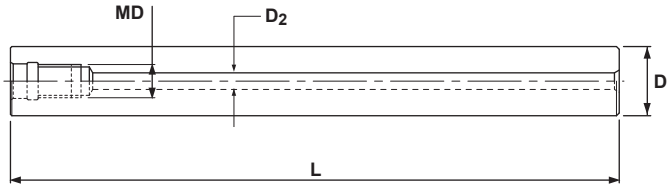

Specifications

CATALOG NUMBER	STK	DIMENSIONS			
		D	L	MD	D2
MSN-M10-130S-S18C	•	18	130	M10	4
MSN-M10-190S-S18C	•	18	190	M10	4
MSN-M10-240S-S18C	•	18	240	M10	4
MSN-M10-130S-S20C	•	20	130	M10	4
MSN-M10-190S-S20C	•	20	190	M10	4
MSN-M10-250S-S20C	•	20	250	M10	4
MSN-M12-185S-S23C	•	23	185	M12	6
MSN-M12-265S-S23C	•	23	265	M12	6
MSN-M12-185S-S24C	•	24	185	M12	6
MSN-M12-265S-S24C	•	24	265	M12	6
MSN-M12-145S-S25C	•	25	145	M12	6
MSN-M12-215S-S25C	•	25	215	M12	6
MSN-M12-285S-S25C	•	25	285	M12	6
MSN-M16-160S-S28C	•	28	160	M16	8
MSN-M16-230S-S28C	•	28	230	M16	8
MSN-M16-310S-S28C	•	28	310	M16	8
MSN-M16-157S-S32C	•	32	157	M16	8
MSN-M16-217S-S32C	•	32	217	M16	8
MSN-M16-287S-S32C	•	32	287	M16	8
MSN-M16-357S-S32C	•	32	357	M16	8

EXSKS Series

INCH METRIC

MODULAR HEAD HOLDERS

MGN TYPE

G-Body Coolant Thru

G-Body

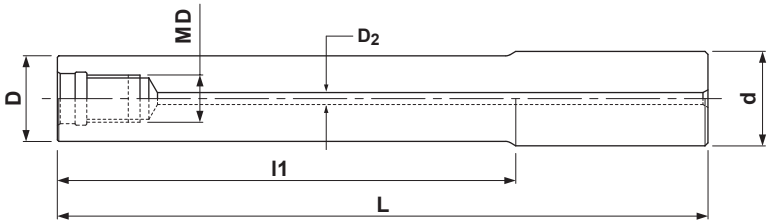

Specifications - Inch

CATALOG NUMBER	STK	DIMENSIONS					
		D	l1	L	d	MD	D2
MGN-M10-0.5-S075	•	.728	.500	3.50	.750	M10	.157
MGN-M10-1.0-S075	•	.728	1.00	4.00	.750	M10	.157
MGN-M10-2.0-S075	•	.728	2.00	5.00	.750	M10	.157
MGN-M12-0.5-S100	•	.945	.500	3.50	1.00	M12	.236
MGN-M12-1.0-S100	•	.945	1.00	4.00	1.00	M12	.236
MGN-M12-2.0-S100	•	.945	2.00	5.00	1.00	M12	.236
MGN-M12-3.0-S100	•	.945	3.00	6.00	1.00	M12	.236
MGN-M16-0.5-S125	•	1.14	.500	3.50	1.25	M16	.315
MGN-M16-1.0-S125	•	1.14	1.00	4.00	1.25	M16	.315
MGN-M16-2.0-S125	•	1.14	2.00	5.00	1.25	M16	.315
MGN-M16-3.0-S125	•	1.14	3.00	6.00	1.25	M16	.315

G-Body

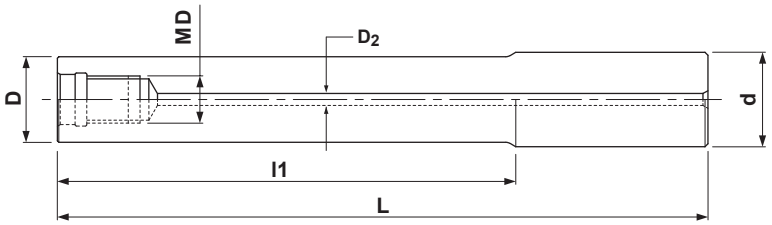

Specifications - Metric

CATALOG NUMBER	STK	DIMENSIONS					
		D	l1	L	d	MD	D2
MGN-M10-30-S20	•	19	30	100	20	M10	4
MGN-M12-35-S25	•	24	35	105	25	M12	4
MGN-M12-85-S25	•	24	85	165	25	M12	4
MGN-M16-37-S32	•	29	37	107	32	M16	6
MGN-M16-77-S32	•	29	77	157	32	M16	6

Notes

WORLDWIDE DISTRIBUTION

Europe:

Austria
Belgium
Czech Republic
Denmark
England
Finland
France
Germany
Greece
Holland
Hungary
Italy
Ireland
Netherlands
Norway
Poland
Portugal
Romania
Slovenia
Spain
Sweden
Switzerland

North America:

Canada
Mexico
U.S.A.

North East:

Russia

Middle East:

India
Israel
Pakistan
Turkey

Asia:

China
Indonesia
Japan
Korea
Malaysia
Philippines
Singapore
Taiwan
Thailand
Vietnam

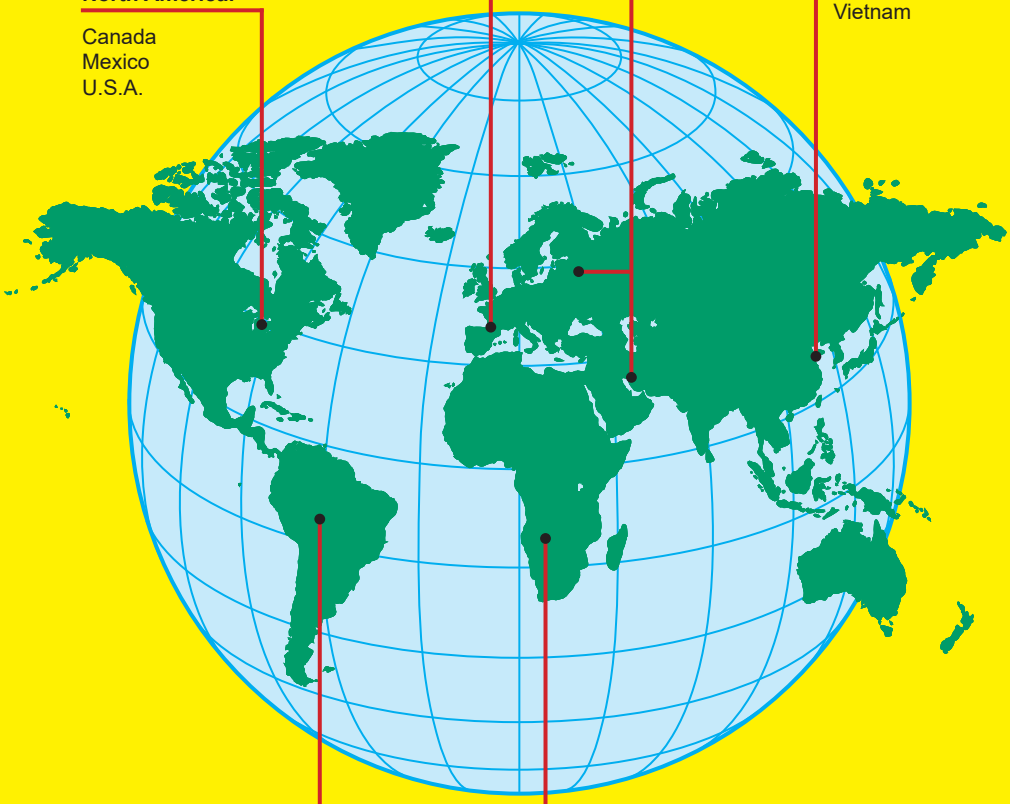

South America:

Brazil
Argentina

Africa:

South Africa

DIJET, INC.
45807 Helm Street, Plymouth, MI 48170
Phone: 1-800-743-4538 Fax: 1-734-454-9395
www.dijetusa.com

DIJET INDUSTRIAL CO., LTD.
2-1-18, Kami-Higashi, Hirano-ku,
Osaka 547-0002, Japan
Phone: +81-6-6794-0167
Fax: +81-6-6793-3930
www.dijet.co.jp

DIJET GmbH
Immermannstr. 9
40210 Düsseldorf, Germany
Phone: +49 (0) 211-50088820
Fax: +49 (0) 211-50088823
www.dijet.de

ISO9001 JQA-2089
ISO14001 JQA-EM1580

No part of this catalog may be printed, copied or reproduced without the expressed written permission of DIJET, Inc.