PRODUCT NEWS

PN-U-009

TYPE
XFG / MXF

DIJET®

DIEMASTER 5G

High Efficient Multi-Purpose Finisher

- Modular type ø 3/4“~ø 1-1/4“ (ø 16mm~ø 42mm)
- Face mill type (ø 52mm~ø 66mm)

www.dijetusa.com

Diemaster 5G

Features

Feature 1

Multiple machining styles

Side Wall Finishing
Bottom Finishing
Semi-Finishing
Plunge Finishing & Semi-Finishing

Feature 2

Economical double-sided insert (6 corners)
High accuracy with H class tolerance

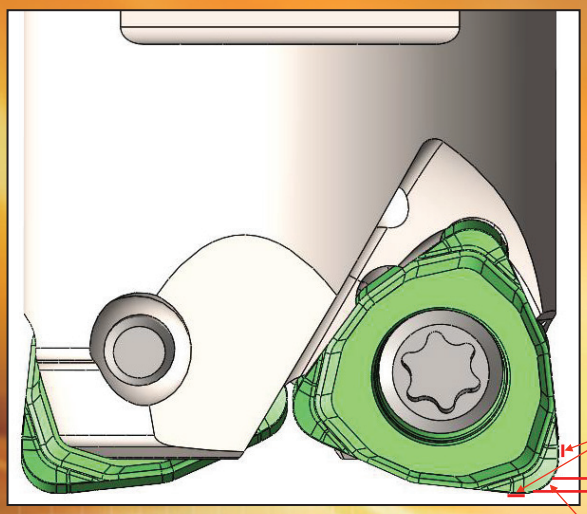

Feature 3

Double wiper insert

Wiper for face cutting and for periphery cutting

Feature 4

ISO	P					M					K				H		
	P01	P10	P20	P30	P40	M01	M10	M20	M30	M40	K01	K10	K20	K30	H01	H10	H20
Application Range	DH103	JC8015					JC8015				DH103	JC8015				DH103	

Available in 2 insert grades:

PVD coated grade “JC8015” is widely applied to general steel, mold steel, stainless steel and hardened die steel less than 50 HRC.
PVD coated grade “DH103” has excellent wear-resistance when finishing or semi-finishing high hardened steels.

Cutting Performance

Tool life comparison (P20)

Ø16, Vc=984 sfm, fz=.008”ipt, ap=.012” x 100 pass (finishing side wall), ae=.004”, overhang length: 2.75” by 2N

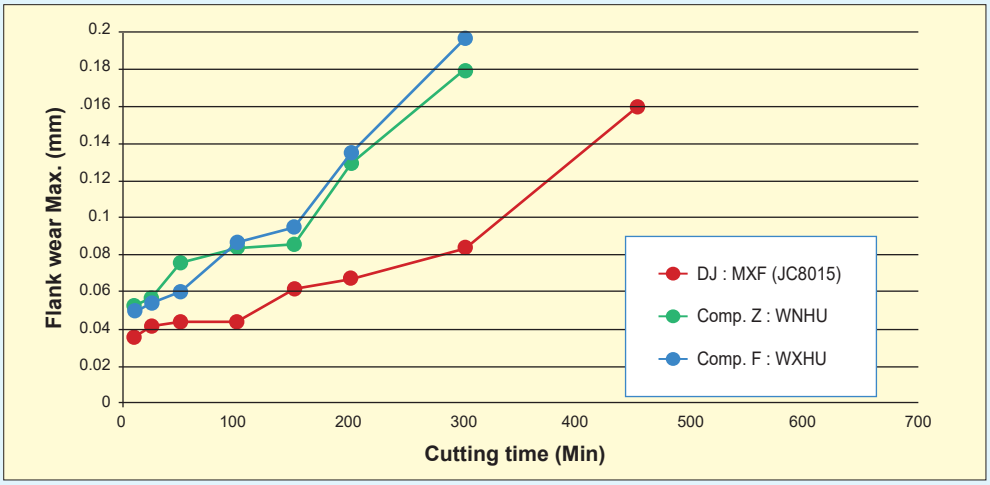

Flat machined surface (P20)

Ø16, Vc=853 sfm, fz=.008’ipt, ap=.006”, ae=.12” overhang length: 2.75” by 2N

MXF

The chip case is beautifully reflected on the machined surface.

Comp. Z

Comp. F

Side machined surface (P20)

Ø16, Vc=984 sfm, fz=.008”ipt, ap=.012” x 100 pass, (finishing side wall), ae=.004”, overhang length: 2.75” by 2N

MXF

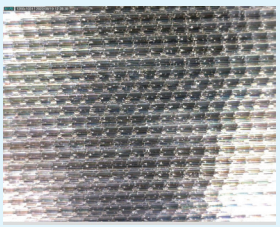

Feed direction
Ra 0.47 µm
Rz 1.74 µm
No step

Comp. Z

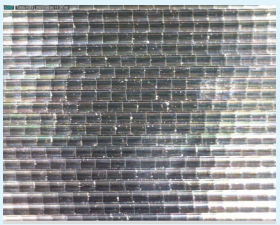

Feed direction
Ra 0.55 µm
Rz 2.1 µm
There is a step in the pick direction

Comp. F

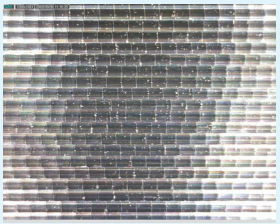

Feed direction
Ra 0.30 µm
Rz 1.36 µm
There is a step in the pick direction

Diemaster 5G

INCH METRIC

MXF TYPE — Modular Head

● Through coolant hole

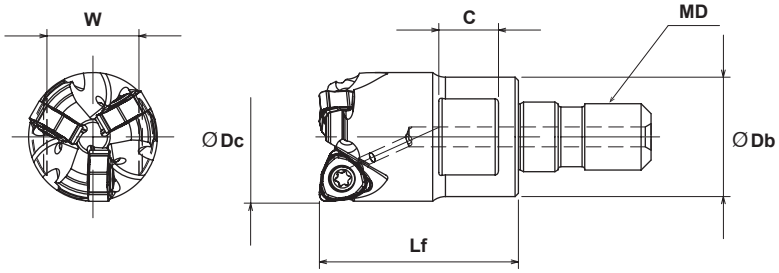

Specifications - Inch

CATALOG NUMBER	STK	DIMENSIONS						HEAD TORQUE LBS/FFT	INSERT	Q	PARTS	
		ØDc	Lf	ØDb	MD	C	W				Screw	Wrench
MXF-3075-M10	•	.750	1.18	.708	M10	.354	.551	11.8	WNHU04T310ZER	3	TSW-2567H	T-08
MXF-4100-M12	•	1.00	1.38	.866	M12	.433	.748	14.7		4		
MXF-5125-M16	•	1.25	1.69	1.14	M16	.472	.866	18.4		5		

Note: All cutters supplied without inserts, wrench, & moly.

Specifications - Metric

CATALOG NUMBER	STK	DIMENSIONS						HEAD TORQUE LBS/FFT	INSERT	Q	PARTS	
		ØDc	Lf	ØDb	MD	C	W				Screw	Wrench
MXF-2016-M8	⊙	16	23	14	M8	8	12	8	WNHU04T310ZER	2	TSW-2567H	T-08
MXF-3020-M10	⊙	20	30	18	M10	9	14	16		3		
MXF-4025-M12	⊙	25	35	22	M12	11	19	20		4		
MXF-5035-M16	⊙	35	43	29	M16	12	22	25		5		
MXF-6042-M16	⊙	42	43	32	M16	12	26	25		6		

⊙ - longer delivery may apply.

Note: All cutters supplied without inserts, wrench, & moly.

METRIC

Diemaster 5G

XFG TYPE — Face Mill

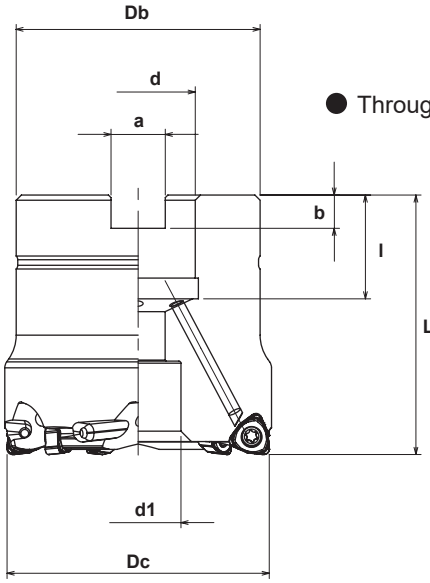

● Through coolant hole

Specifications

CATALOG NUMBER	STK	DIMENSIONS								ARBOR BOLT	Q	INSERT & PARTS
		Dc	Lf	Db	d	d1	a	b	l			
XFG-6052R-22	⊙	52	50	47	22	16.5	10.4	6.3	20	M10	6	WNHU04T310ZER TSW-2567H T-08
XFG-7066R-27	⊙	66	50	48	27	20	12.4	7	22	M12x1.75x30*	7	

⊙ - **longer delivery may apply.**

Note: All cutters supplied without inserts, wrench, & moly.

NOTE: Arbor bolt included with cutters marked with *, other cutters use bolt supplied with arbor.

WNHU04 TYPE — Insert

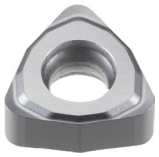

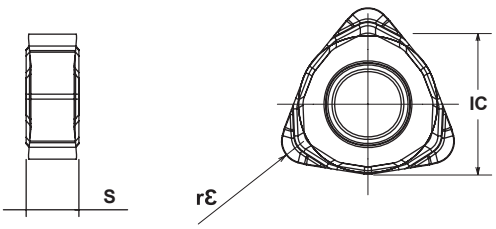

CATALOG NUMBER	STK	TOLERANCE	DIMENSIONS			PVD COATED	
			IC	S	rε	JC8015	DH103
WNHU04T310ZER	•	H	6.35	3.33	1	•	•

Diemaster 5G

INCH METRIC

Cutting Data

MXF

1. Finishing on P20H

Overhung length: 10”

Work	Part Name		Plastic Mold
	Material		P20H
	Hardness		~38HRC
Tool	Tool No.		MXF-3020-M10
	Insert No.		WNHU04T310ZER (DH103)
Cutting Conditions	Spindle Speed Cutting Speed	n	3,500 (min-1)
		Vc	720 (sfm)
	Feed Speed	Vt	78.7 (ipm)
		fz	.008 (ipt)
	ap (mm)		.008”
	ae (mm)		~ .4”
	Coolant		Air blow
	Machine		Vertical M/C

Result

No wear after 12 hours of machining.
Excellent wear diameter accuracy.

2. Finishing on P20HH

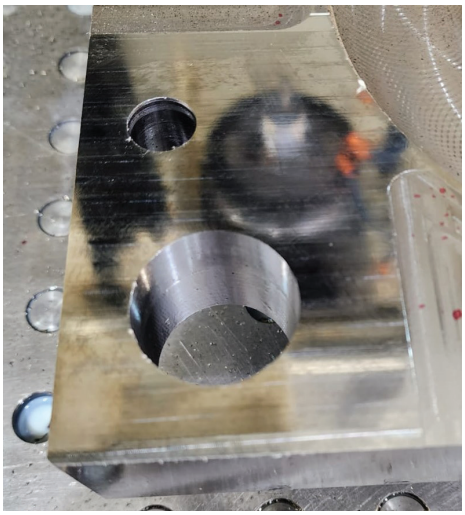

Work	Part Name		Part Details
	Material		P20HH
	Hardness		36~38HRC
Tool	Tool No.		MXF-2016-M8
	Insert No.		WNHU04T310ZER (DH103)
Cutting Conditions	Spindle Speed Cutting Speed	n	5,880 (min-1)
		Vc	970 (sfm)
	Feed Speed	Vt	94 (ipm)
		fz	.008 (ipt)
	ap (mm)		.01”
	ae (mm)		.25”
	Coolant		Air blow
	Machine		Vertical M/C

Result

Able to obtain an excellent machined surface comparable to our Mirror Radius..

Recommended Data for Profile

Ramping

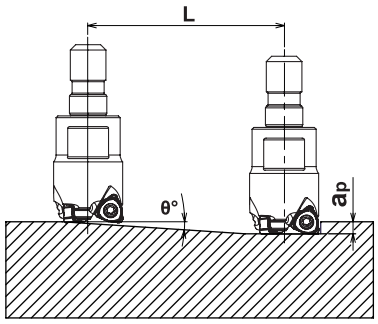

Helical Interpolation

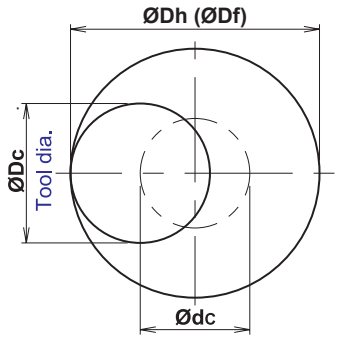

- Calculation of tool pass dia.

Ødc = ØDh (ØDf) - ØDc

Tool pass dia. B Bore dia. Tool Dia.

- **Depth of cut per one circuit should not exceed max. depth of cut AP**
- **Down cutting is recommended so tool pass rotation should be counterclockwise.**
- **To obtain a flat bottom surface when helical milling, it requires removing "the uncut part" in the center of work materials at final pass.**

◎In case of ramping and helical interpolation, apply 80% or less feed speed from standard cutting condition table.

◎In case of helical interpolation, recommend wet cutting by coolant through the tool.

	CATALOG NUMBER	TOOL DIAMETER Dc	MAX. DEPTH OF CUT: ap	RAMPING		HELICAL INTERPOLATION		
				Max Ramp Angle	Total Cutting Length at Max. AP: L	Min Through Bore Diameter: Dh min	Max Through Bore Diameter: Dh max	Min. Counter Bore Diameter: Df Min.
INCH	MXF-3075-M10	0.75	.02"	0.3	3.76"	1.35"	1.46"	1.41"
INCH	MXF-4100-M12	1.00	.02"	0.2	5.64"	1.85"	1.96"	1.91"
INCH	MXF-5125-M16	1.25	.02"	0.15	7.52"	2.35"	2.46"	2.41"
METRIC	MXF-2016-M8	16	0.5	0.4	72	28.2	31	29.6
METRIC	MXF-3020-M10	20	0.5	0.3	95	36.2	39	37.6
METRIC	MXF-4025-M12	25	0.5	0.2	143	46.2	49	47.6
METRIC	MXF-5035-M16	35	0.5	0.15	191	66.2	69	67.6
METRIC	MXF-6042-M16	42	0.5	0.1	286	80.2	83	81.6
METRIC	XFG-6052R-22	52	0.5	0.1	286	100.2	103	101.6
METRIC	XFG-7066R-27	66	0.5	Not Recommended				

NOTE: Drilling is not recommended.

Recommended Cutting Data for Finishing

Material	Insert Grade		Finishing	
			Side Wall	Bottom Face
Gray Cast Iron	DH103 (JC8015)	SFM	1,150	1,000
		IPT	.010”	.008”
		DOC	.012”	.008”
		WOC	.008”	.080”
Nodular Cast Iron	DH103 (JC8015)	SFM	1,150	1,000
		IPT	.010”	.008”
		DOC	.012”	.008”
		WOC	.008”	.080”
Carbon Steel	JC8015	SFM	1,000	850
		IPT	.008”	.008”
		DOC	.012”	.006”
		WOC	.004”	.080”
Low Alloy Steel	JC8015	SFM	1,000	850
		IPT	.008”	.008”
		DOC	.012”	.006”
		WOC	.004”	.080”
Mold Steel	DH103 (JC8015)	SFM	900	800
		IPT	.006”	.006”
		DOC	.012”	.006”
		WOC	.004”	.080”
Tool & Die Steel (40-50HRC)	DH103 (JC8015)	SFM	800	650
		IPT	.006”	.003”
		DOC	.012”	.004”
		WOC	.004”	.080”
Hardened Die Steel (50-60HRC)	DH103	SFM	600	450
		IPT	.004”	.003”
		DOC	.008”	.004”
		WOC	.004”	.080”
Stainless Steel	JC8015	SFM	900	750
		IPT	.012”	.008”
		DOC	.012”	.006”
		WOC	.004”	.080”
Titanium Alloy	JC8015	SFM	330	200
		IPT	.004”	.004”
		DOC	.010”	.006”
		WOC	.004”	.080”
Inconel	JC8015	SFM	260	180
		IPT	.004”	.004”
		DOC	.010”	.006”
		WOC	.004”	.080”

NOTE: 1. The above cutting conditions should be adjusted according to machine rigidity and workpiece rigidity.
2. The above cutting conditions are for a overhung length of 3Dc. See table below for longer applications.
3. If chattering occurs, reduce the depth of cut to a shallower depth or lower the feed rate.
4. Remove chips by air blow. Be especially careful when machining cavities with a Vertical MC.
5. If using a steel shank, reduce the SFM and IPT to 80% of above conditions.

Additional Cutting Data For Longer Tools

Reach/Dia.	~4.0	4.0~4.5	4.5~5.3	5.3~5.7	5.7~6.2	6.3~
rpm %	100	90	80	80	75	70
Feed %	100	90	90	80	75	70

NOTE: The above percentages should be applied, according to tool ratio.

Reduced Cutting Data For Cutting Pattern

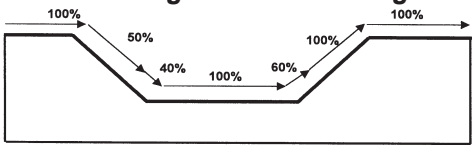

NOTE: Feed should be reduced when cutting the above pattern

Recommended Cutting Data for Semi-finishing & Plunging

Material	Insert Grade		Semi-finishing	Plunging (See diagram below)	
Gray Cast Iron	DH103 (JC8015)	SFM	530	SFM	1,600
		IPT	.024”	IPT	.004”
		DOC	.008”	Ae	.008”
		WOC	45%	PF	3%
Nodular Cast Iron	DH103 (JC8015)	SFM	530	SFM	1,600
		IPT	.024”	IPT	.004”
		DOC	.008”	Ae	.008”
		WOC	45%	PF	3%
Carbon Steel	JC8015	SFM	620	SFM	1,300
		IPT	.024”	IPT	.004”
		DOC	.008”	Ae	.008”
		WOC	45%	PF	3%
Low Alloy Steel	JC8015	SFM	620	SFM	1,300
		IPT	.024”	IPT	.004”
		DOC	.008”	Ae	.008”
		WOC	45%	PF	3%
Mold Steel	DH103 (JC8015)	SFM	530	SFM	800
		IPT	.024”	IPT	.004”
		DOC	.008”	Ae	.008”
		WOC	45%	PF	3%
Tool & Die Steel (40-50HRC)	DH103 (JC8015)	SFM	480	SFM	600
		IPT	.024”	IPT	.003”
		DOC	.008”	Ae	.008”
		WOC	45%	PF	3%
Hardened Die Steel (50-60HRC)	DH103	SFM	300	SFM	400
		IPT	.012”	IPT	.003”
		DOC	.008”	Ae	.006”
		WOC	45%	PF	3%
Stainless Steel	JC8015	SFM	550	SFM	800
		IPT	.024”	IPT	.004”
		DOC	.008”	Ae	.008”
		WOC	45%	PF	3%
Titanium Alloy	JC8015	SFM	150	SFM	330
		IPT	.016”	IPT	.003”
		DOC	.008”	Ae	.008
		WOC	.024”	PF	3%
Inconel	JC8015	SFM	130	SFM	260
		IPT	.012”	IPT	.003%
		DOC	.008”	Ae	.006”
		WOC	45%	PF	3%

NOTE: 1. The above cutting conditions should be adjusted according to machine rigidity and workpiece rigidity.
2. The above cutting conditions are for a overhung length of 3Dc. See table below for longer applications.
3. If chattering occurs, reduce the depth of cut to a shallower depth or lower the feed rate.
4. Remove chips by air blow. Be especially careful when machining cavities with a Vertical MC.
5. If using a steel shank, reduce the SFM and IPT to 80% of above conditions.
6. For up and down milling, use ae = .004” or less.

Additional Cutting Data For Longer Tools

Reach/Dia.	~4.0	4.0~4.5	4.5~5.3	5.3~5.7	5.7~6.2	6.3~
rpm %	100	90	80	80	75	70
Feed %	100	90	90	80	75	70

NOTE: The above percentages should be applied, according to tool ratio.

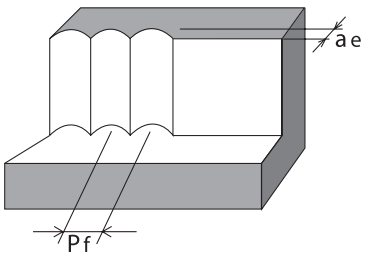

Reduced Cutting Data For Cutting Pattern

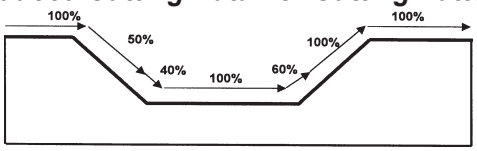

NOTE: Feed should be reduced when cutting the above pattern

Diemaster 5G

INCH

MODULAR HEAD HOLDERS

MSN TYPE

Solid Carbide Coolant Thru

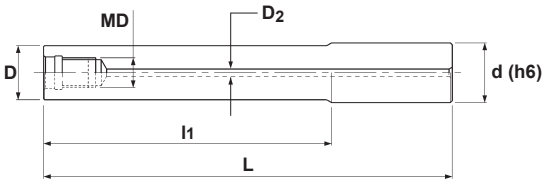

Specifications

CATALOG NUMBER	STK	DIMENSIONS					
		D	l1	L	d	MD	D2
MSN-M8-0.5-S062C	•	.591	.500	3.50	.625	M8	.157
MSN-M8-1.0-S062C	•	.591	1.00	4.00	.625	M8	.157
MSN-M8-2.0-S062C	•	.591	2.00	5.00	.625	M8	.157
MSN-M8-4.0-S062C	•	.591	4.00	7.00	.625	M8	.157
MSN-M8-6.0-S062C	•	.591	6.00	9.00	.625	M8	.157
MSN-M10-0.5-S075C	•	.728	.500	3.50	.750	M10	.157
MSN-M10-1.0-S075C	•	.728	1.00	4.00	.750	M10	.157
MSN-M10-2.0-S075C	•	.728	2.00	5.00	.750	M10	.157
MSN-M10-3.0-S075C	•	.728	3.00	6.00	.750	M10	.157
MSN-M10-4.0-S075C	•	.728	4.00	7.00	.750	M10	.157
MSN-M10-5.0-S075C	•	.728	5.00	8.00	.750	M10	.157
MSN-M10-6.0-S075C	•	.728	6.00	9.00	.750	M10	.157
MSN-M12-0.5-S100C	•	.945	.500	3.50	1.00	M12	.236
MSN-M12-1.0-S100C	•	.945	1.00	4.00	1.00	M12	.236
MSN-M12-2.0-S100C	•	.945	2.00	5.00	1.00	M12	.236
MSN-M12-3.0-S100C	•	.945	3.00	6.00	1.00	M12	.236
MSN-M12-4.0-S100C	•	.945	4.00	7.00	1.00	M12	.236
MSN-M12-5.0-S100C	•	.945	5.00	8.00	1.00	M12	.236
MSN-M12-6.0-S100C	•	.945	6.00	9.00	1.00	M12	.236
MSN-M12-8.0-S100C	•	.945	8.00	11.00	1.00	M12	.236
MSN-M16-0.5-S125C	•	1.14	.500	3.50	1.25	M16	.315
MSN-M16-1.0-S125C	•	1.14	1.00	4.00	1.25	M16	.315
MSN-M16-2.0-S125C	•	1.14	2.00	5.00	1.25	M16	.315
MSN-M16-4.0-S125C	•	1.14	4.00	7.00	1.25	M16	.315
MSN-M16-6.0-S125C	•	1.14	6.00	9.00	1.25	M16	.315
MSN-M16-8.0-S125C	•	1.14	8.00	11.00	1.25	M16	.315

METRIC

Diemaster 5G

MODULAR HEAD HOLDERS

MSN TYPE

Solid Carbide Coolant Thru

Fig. 1

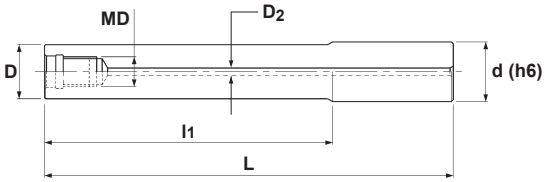

Fig. 2

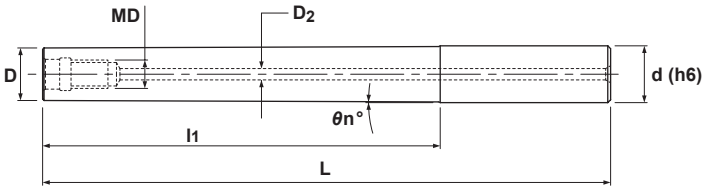

Specifications

CATALOG NUMBER	STK	DIMENSIONS							FIG.
		D	l1	L	d	θn°	MD	D2	
MSN-M8-20-S16C	•	15.5	20	75	16	-	M8	4	1
MSN-M8-40-S16C	•	15.5	40	95	16	-	M8	4	1
MSN-M8-40T-S20C	•	14.5	40	100	20	3°30’	M8	4	2
MSN-M8-77T-S20C	•	14.5	77	143	20	1°45’	M8	4	2
MSN-M8-80-S16C	•	15.5	80	135	16	-	M8	4	1
MSN-M8-120-S16C	•	15.5	120	175	16	-	M8	4	1
MSN-M8-152-S16C	•	15.5	152	207	16	-	M8	4	1
MSN-M10-20-S20C	•	19.5	20	80	20	-	M10	4	1
MSN-M10-40-S20C	•	19.5	40	100	20	-	M10	4	1
MSN-M10-40T-S20C	•	18.5	40	100	20	0°43’	M10	4	2
MSN-M10-70-S20C	•	19.5	70	130	20	-	M10	4	1
MSN-M10-85T-S25C	•	18.5	85	161	25	2°	M10	4	2
MSN-M10-90-S20C	•	19.5	90	150	20	-	M10	4	1
MSN-M10-90T-S20C	•	18.5	90	150	20	0°19’	M10	4	2
MSN-M10-140-S20C	•	19.5	140	200	20	-	M10	4	1
MSN-M10-140T-S20C	•	18.5	140	200	20	0°12’	M10	4	2
MSN-M10-160-S20C	•	19.5	160	220	20	-	M10	4	1
MSN-M10-210-S20C	•	19.5	210	270	20	-	M10	4	1
MSN-M12-25-S25C	•	24	25	90	25	-	M12	6	1
MSN-M12-55-S25C	•	24	55	120	25	-	M12	6	1
MSN-M12-100T-S32C	•	23.5	100	180	32	2°	M12	6	2
MSN-M12-105-S25C	•	24	105	170	25	-	M12	6	1
MSN-M12-135-S25C	•	24	135	215	25	-	M12	6	1
MSN-M12-155-S25C	•	24	155	220	25	-	M12	6	1
MSN-M12-200-S25C	•	24	200	265	25	-	M12	6	1

Diemaster 5G

METRIC

MODULAR HEAD HOLDERS

MSN TYPE

Solid Carbide Coolant Thru

Fig. 1

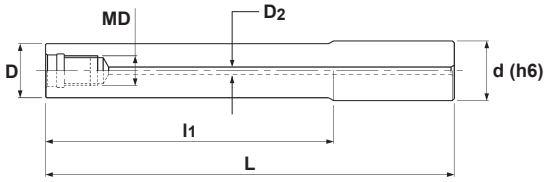

Fig. 2

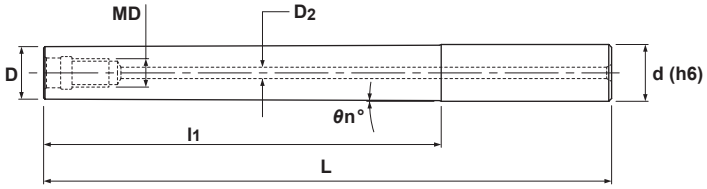

Specifications

CATALOG NUMBER	STK	DIMENSIONS							FIG.
		D	l1	L	d	θn°	MD	D2	
MSN-M16-25-S32C	•	29	25	90	32	-	M16	8	1
MSN-M16-55-S32C	•	29	55	120	32	-	M16	8	1
MSN-M16-77-S32C	•	29	77	157	32	-	M16	8	1
MSN-M16-97-S32C	•	29	97	177	32	-	M16	8	1
MSN-M16-105-S32C	•	29	105	170	32	-	M16	8	1
MSN-M16-117T-S32C	•	29	117	197	32	0°38’	M16	8	2
MSN-M16-127-S32C	•	29	127	207	32	-	M16	8	1
MSN-M16-127T-S32C	•	29	127	207	32	0°30’	M16	8	2
MSN-M16-155-S32C	•	29	155	220	32	-	M16	8	1
MSN-M16-177-S32C	•	29	177	257	32	-	M16	8	1
MSN-M16-177T-S32C	•	29	177	257	32	0°23’	M16	8	2
MSN-M16-195-S32C	•	29	195	260	32	-	M16	8	1
MSN-M16-197T-S32C	•	29	197	277	32	0°23’	M16	8	2
MSN-M16-225-S32C	•	29	225	290	32	-	M16	8	1
MSN-M16-245-S32C	•	29	245	310	32	-	M16	8	1
MSN-M16-295-S32C	•	29	295	360	32	-	M16	8	1

METRIC

Diemaster 5G

MODULAR HEAD HOLDERS

MSN TYPE

Solid Carbide Straight Coolant Thru

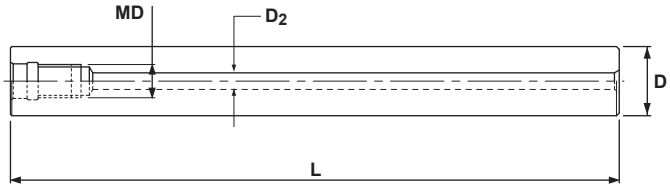

Specifications

CATALOG NUMBER	STK	DIMENSIONS			
		D	L	MD	D2
MSN-M8-87S-S14C	•	14	87	M8	3
MSN-M8-137S-S14C	•	14	137	M8	3
MSN-M8-97S-S15C	•	15	97	M8	4
MSN-M8-147S-S15C	•	15	147	M8	4
MSN-M8-197S-S15C	•	15	197	M8	4
MSN-M8-107S-S16C	•	16	107	M8	4
MSN-M8-157S-S16C	•	16	157	M8	4
MSN-M10-130S-S18C	•	18	130	M10	4
MSN-M10-190S-S18C	•	18	190	M10	4
MSN-M10-240S-S18C	•	18	240	M10	4
MSN-M10-130S-S20C	•	20	130	M10	4
MSN-M10-190S-S20C	•	20	190	M10	4
MSN-M10-250S-S20C	•	20	250	M10	4
MSN-M12-185S-S23C	•	23	185	M12	6
MSN-M12-265S-S23C	•	23	265	M12	6
MSN-M12-185S-S24C	•	24	185	M12	6
MSN-M12-265S-S24C	•	24	265	M12	6
MSN-M12-145S-S25C	•	25	145	M12	6
MSN-M12-215S-S25C	•	25	215	M12	6
MSN-M12-285S-S25C	•	25	285	M12	6
MSN-M16-160S-S28C	•	28	160	M16	8
MSN-M16-230S-S28C	•	28	230	M16	8
MSN-M16-310S-S28C	•	28	310	M16	8
MSN-M16-157S-S32C	•	32	157	M16	8
MSN-M16-217S-S32C	•	32	217	M16	8
MSN-M16-287S-S32C	•	32	287	M16	8
MSN-M16-357S-S32C	•	32	357	M16	8

Diemaster 5G

INCH METRIC

MODULAR HEAD HOLDERS

MGN TYPE

G-Body Coolant Thru

G-Body

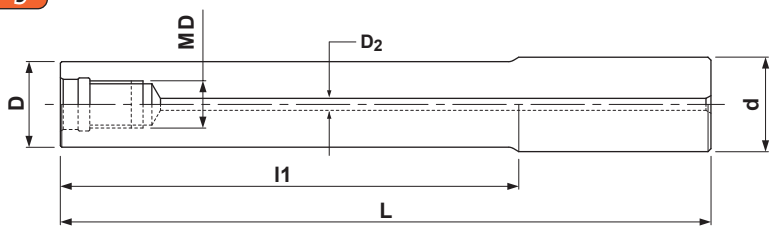

Specifications - Inch

CATALOG NUMBER	STK	DIMENSIONS					
		D	l1	L	d	MD	D2
MGN-M8-0.5-S062	•	.591	.500	3.50	.625	M8	.157
MGN-M8-1.0-S062	•	.591	1.00	4.00	.625	M8	.157
MGN-M8-2.0-S062	•	.591	2.00	5.00	.625	M8	.157
MGN-M10-0.5-S075	•	.728	.500	3.50	.750	M10	.157
MGN-M10-1.0-S075	•	.728	1.00	4.00	.750	M10	.157
MGN-M10-2.0-S075	•	.728	2.00	5.00	.750	M10	.157
MGN-M12-0.5-S100	•	.945	.500	3.50	1.00	M12	.236
MGN-M12-1.0-S100	•	.945	1.00	4.00	1.00	M12	.236
MGN-M12-2.0-S100	•	.945	2.00	5.00	1.00	M12	.236
MGN-M12-3.0-S100	•	.945	3.00	6.00	1.00	M12	.236
MGN-M16-0.5-S125	•	1.14	.500	3.50	1.25	M16	.315
MGN-M16-1.0-S125	•	1.14	1.00	4.00	1.25	M16	.315
MGN-M16-2.0-S125	•	1.14	2.00	5.00	1.25	M16	.315
MGN-M16-3.0-S125	•	1.14	3.00	6.00	1.25	M16	.315

Specifications - Metric

CATALOG NUMBER	STK	DIMENSIONS					
		D	l1	L	d	MD	D2
MGN-M8-17-S16	•	15.5	17	97	16	M8	4
MGN-M10-30-S20	•	19	30	100	20	M10	4
MGN-M12-35-S25	•	24	35	105	25	M12	4
MGN-M12-85-S25	•	24	85	165	25	M12	4
MGN-M16-37-S32	•	29	37	107	32	M16	6
MGN-M16-77-S32	•	29	77	157	32	M16	6

PROPER MOUNTING OF MODULAR HEADS

■ **Cleaning**
Remove dirt and chips with air from the connecting thread and face of modular head and MSN/MGN shank holder.

■ **Initial Tightening**
Tighten by hand until the head and the shank holder faces touch.

■ **Final Tightening**
Tighten slowly with torque control spanner wrench or DIJET DS type spanner wrench and confirm that there is no gap.
Attention: Final tightening without initial tightening cause connecting thread damage.

Thread	Tightening torque	Spanner size
M6	8N·m	8 ✧
M8	16N·m	10, 12 ✧
M10	16N·m	14, 15
M12	20N·m	17, 19
M16	25N·m	22, 26

Modular heads are supplied without spanner wrench.

In case of choosing torque control spanner wrench, confirm that the wrench size is matched to the dimensions W & C of each modular head. (There are some cases that modifying the thickness of spanner wrench is necessary)

✧ = DIJET stocks DS-8 and DS-12 type spanner wrenches.

SELECTION OF MSN CARBIDE SHANK HOLDER

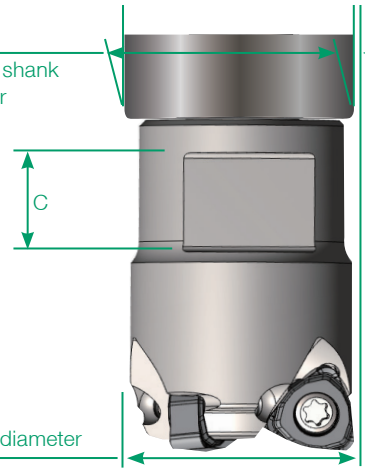

Ø Dc – Ø D1 ≥ 1mm

When using modular head over Ø 16mm, **please select MSN carbide shank which the diameter (Ø D1) is 1 mm or smaller than modular head (Ø Dc)**.
Wrong selection can cause damage to the carbide shank.

Coolant or air blow is recommended to remove the chips.

Caution for mounting in shrink fit holder.
When you use a carbide shank and a modular head on a shrink fit holder, please shrink fit only the carbide shank without mounting the modular head. Mount the modular head on the shank after shrink fit operation is complete.

In case of shrink fit MSN shank + modular head together, it will be difficult to loosen due to heat dissapation.

WORLDWIDE DISTRIBUTION

Europe:

Austria
Belgium
Czech Republic
Denmark
England
Finland
France
Germany
Greece
Holland
Hungary
Italy
Ireland
Netherlands
Norway
Poland
Portugal
Romania
Slovenia
Spain
Sweden
Switzerland

North America:

Canada
Mexico
U.S.A.

North East:

Russia

Middle East:

India
Israel
Pakistan
Turkey

Asia:

China
Indonesia
Japan
Korea
Malaysia
Philippines
Singapore
Taiwan
Thailand
Vietnam

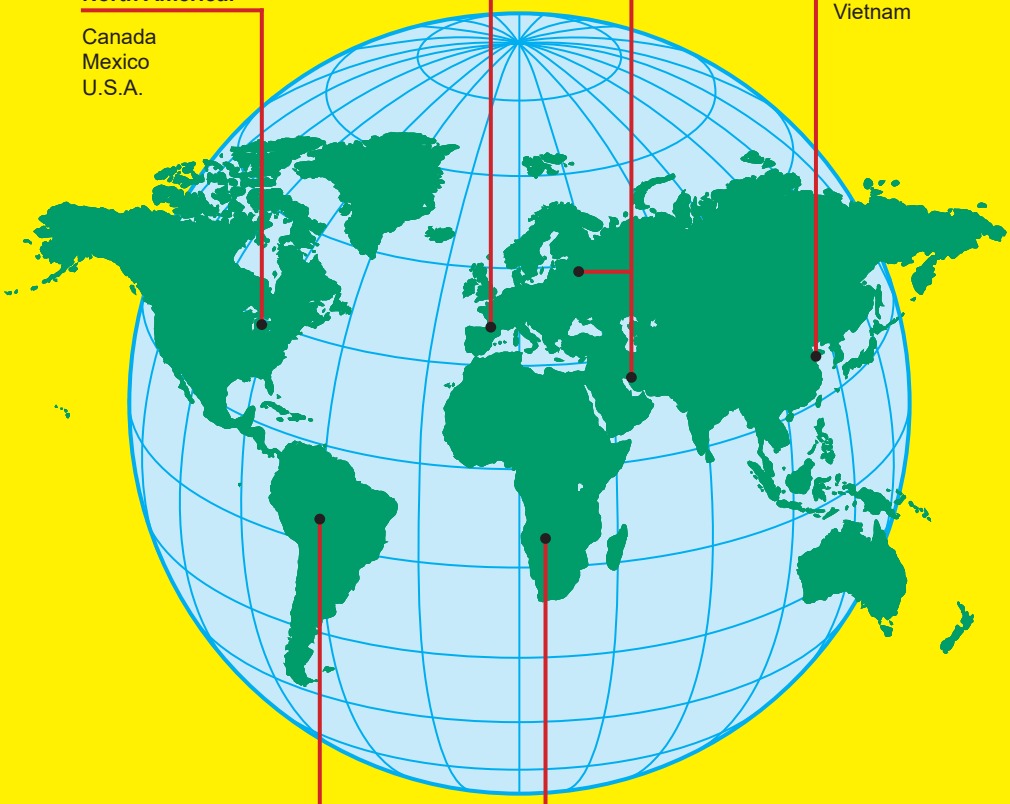

South America:

Brazil
Argentina

Africa:

South Africa

DIJET, INC.
45807 Helm Street, Plymouth, MI 48170
Phone: 1-800-743-4538 Fax: 1-734-454-9395
www.dijetusa.com

DIJET INDUSTRIAL CO., LTD.
2-1-18, Kami-Higashi, Hirano-ku,
Osaka 547-0002, Japan
Phone: +81-6-6794-0167
Fax: +81-6-6793-3930
www.dijet.co.jp

DIJET GmbH
Immermannstr. 9
40210 Düsseldorf, Germany
Phone: +49 (0) 211-50088820
Fax: +49 (0) 211-50088823
www.dijet.de

ISO9001 JQA-2089
ISO14001 JQA-EM1580

No part of this catalog may be printed, copied or reproduced without the expressed written permission of DIJET, Inc.